A review of Silicon detectors in high energy physics experiments

Agnieszka Zalewska
H.Niewodniczański Institute of Nuclear Physics
Kraków
ul.Radzikowskiego 152, 31-342 Kraków, Poland

2000 IEEE Nuclear Science Symposium
Short Courses
Lyon, October 15th 2000

Outline

- "Silicon revolution" in high energy physics (HEP) experiments: why, when, typical applications, types of detectors
- "Historical" detectors: silicon telescopes in NA11/NA32 experiments at CERN searching for charm
- Towards Silicon vertex detectors at colliders: basic requirements, VLSI electronics, optimization of the detector geometry, first projects
- The DELPHI vertex detector as an example of the practical realization
- Pioneering big systems with different types of silicon detectors
- Silicon for frontier physics from the last decade
- Future projects

General remarks

It is very difficult to make a complete review of Silicon detectors in HEP experiments because of the real explosion of this technique during last 20 years

- Since fifties till seventies - big silicon diodes used mainly for energy measurements of particles in nuclear physics experiments
- Beginning of eighties - first silicon microstrip detectors with a hybrid electronics and CCD's in the fixed target experiments
- End of eighties - first silicon vertex detectors with a VLSI electronics in the collider experiments
- Year 2000 - hard to find a HEP experiment without silicon detectors, they start to conquest the cosmic space in astrophysics experiments

The career of Silicon detectors can be compared to the carrier of wire chambers of George Charpak

"Silicon revolution" - why?

1 - Because of the exceptional features of Silicon

- very good energy resolution ⇔ an average energy needed for the production of a single electron-hole pair equals to 3.6 eV,
- potentially very good spatial resolution ⇔ detectors can be based on primary ionization signal (without internal amplification) and can easily achieve a few microns resolution for measurements of particle positions
- very good two-particle separation
- two types of carriers (electrons and holes) are present ⇔ two coordinates can be precisely measured even by strip detectors
- potentially very fast detectors ⇔ a typical signal collection time is of the order of 10-20 ns for the silicon diode with a typical thickness of 300 μm
- photon sensitive detectors

"Silicon revolution" - why?

2 - Because of physics needs for precise tracking

Short lived particles containing heavy quarks c (charm particles) and b (beauty particles) and short lived leptons τ have been discovered in the seventies

charm lifetime: longer for mesons, e.g. $D^{\pm}$ $(10.51 \pm 0.13) \times 10^{-13}$s

shorter for baryons, e.g. Λc $(2.06 \pm 0.12) \times 10^{-13}$

average beauty hadron lifetime: $(15.64 \pm 0.14) \times 10^{-13}$s

τ lepton lifetime: $(2.906 \pm 0.011) \times 10^{-13}$s

Ú **decay length $l = \gamma\beta ct$,** so typically the decay vertex is at a distance of single millimeters from the interaction vertex

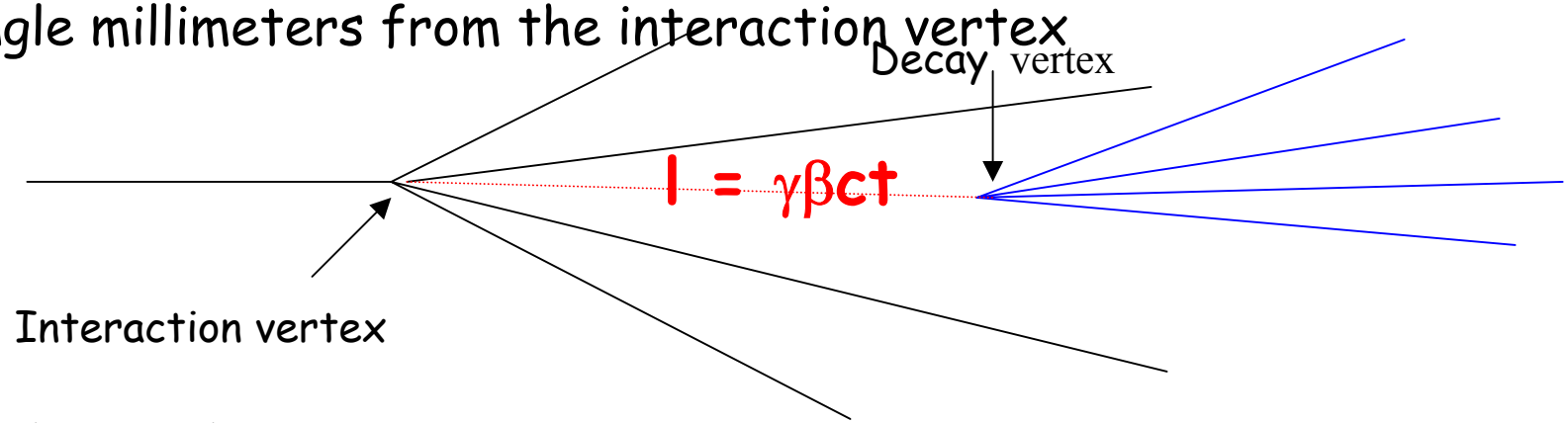

"Silicon revolution" - when?

Initial studies of charm and beauty with accessible techniques

- First measurements of the lifetime of B mesons using gaseous detectors were at a limit of significance
- Lifetimes of the charm particles were inaccessible for gaseous detectors, some cases of charm decays observed in the emulsion experiments

Beginning of the silicon era

In 1980 J.Kemmer applied the planar process to the production of Silicon detectors based on an inverse biased p-n junction (J.Kemmer, NIM 169 (1980) 499) - see talk of Anna Peisert

- Silicon detectors with a very good spatial resolution were produced for studies of the newly discovered short lived particles - real studies of the charm mesons and baryons started in the fixed target experiments equipped with silicon telescopes.

Roles of Silicon detectors in HEP experiments

The main role:

- Precise measurements of track positions and directions close to the interaction point (Silicon vertex detectors) towards general track measurements (Silicon trackers) — **this is the main subject of the present talk**

Other applications:

- Parts of instrumented targets
- Multiplicity detectors (due to a very good double track resolution)
- Identification of low momentum particles (through dE/dx measurements)
- Continuously increasing role in triggers
- Readout of calorimeters and RICH detectors

Types of Silicon detectors in HEP experiments

Silicon diodes:

- Single and double sided strip detectors
- Pad detectors
- Pixel detectors (Active Pixel Sensors) - bump bonded to the readout electronics

Other principles of operation:

- Silicon drift chambers
- Charge Coupled Devises (CCD)

Most of them are discussed by Anna Peisert

Charm studies in NA11 experiment at CERN

Using a Silicon telescope of microstrip detectors

six detectors, each with a sensitive area 24mm x 36 mm, strip pitch 20μm, readout pitch 60μm and 120μm, capacitive charge division, the telescope arranged on an optical bench (B.Hyams et al., NIM205 (1983) 99)

two projections, tanθ=±0.25, of a 175 GeV/c π^-Be interaction, measured in the six planes of the Silicon telescope (three planes per projection)

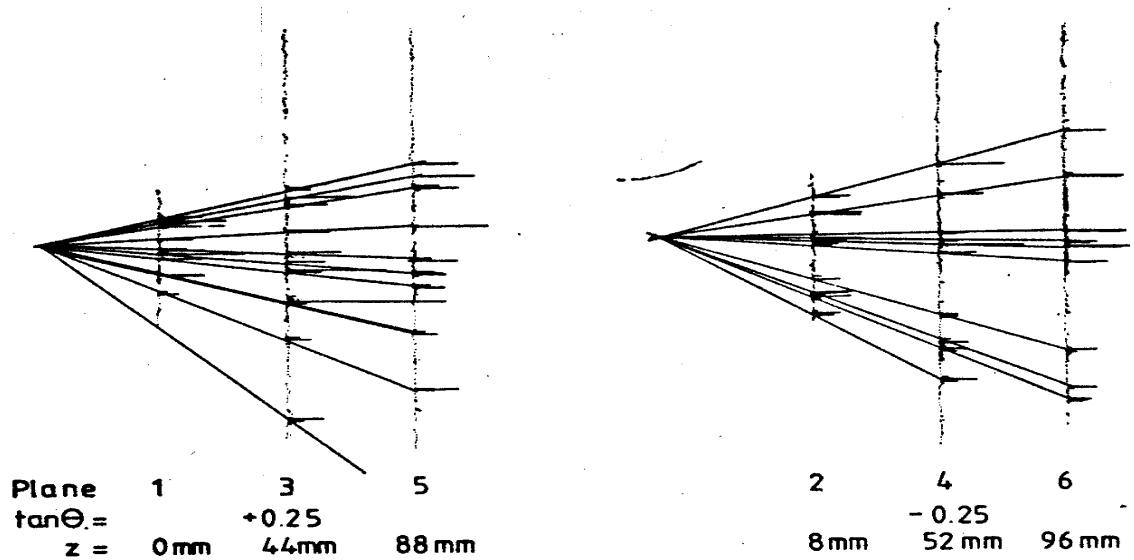

- spatial resolution of single microns achieved (4.5 μm for 60 μm pitch and 7 μm for 120 μm pitch), studies of D mesons possible, access to shorter lifetimes required the telescope's upgrade → NA32

Charm studies in the NA11 experiment at CERN

Readout of the detectors realised with hybrid electronics

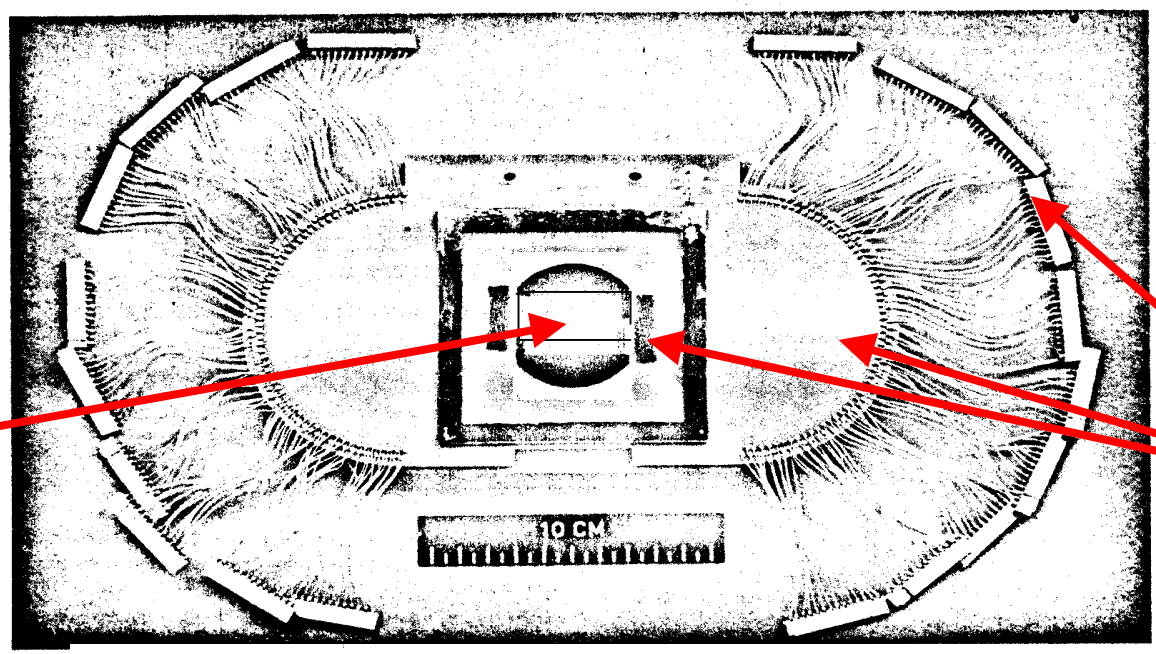

detector

nearby electronics

electronics channel

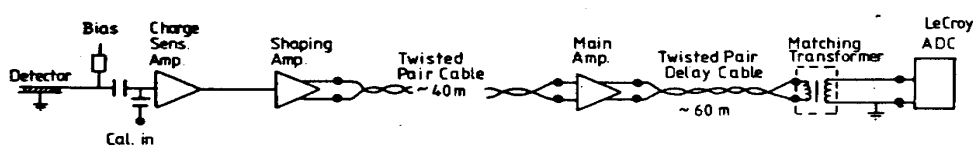

- The ratio of the detector surface to the nearby electronics surface is approximately 1:300, which makes it impossible to cover large areas of detectors → VLSI readout chips necessary to solve this problem

Detectors with capacitive charge division readout

Very first tests performed with Silicon surface barrier strip counters in 1980

(J.B.A. England et al. NIM 185 (1981) 43)

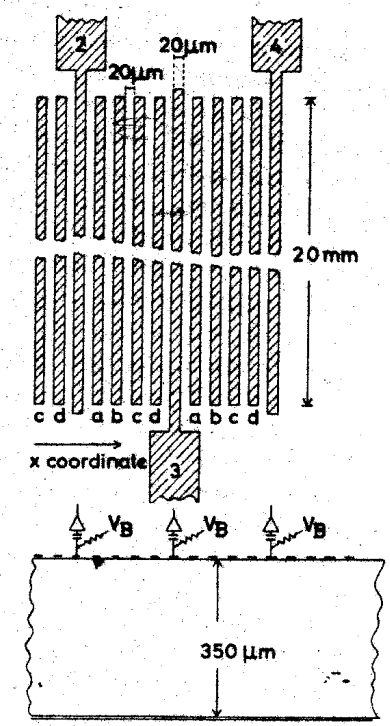

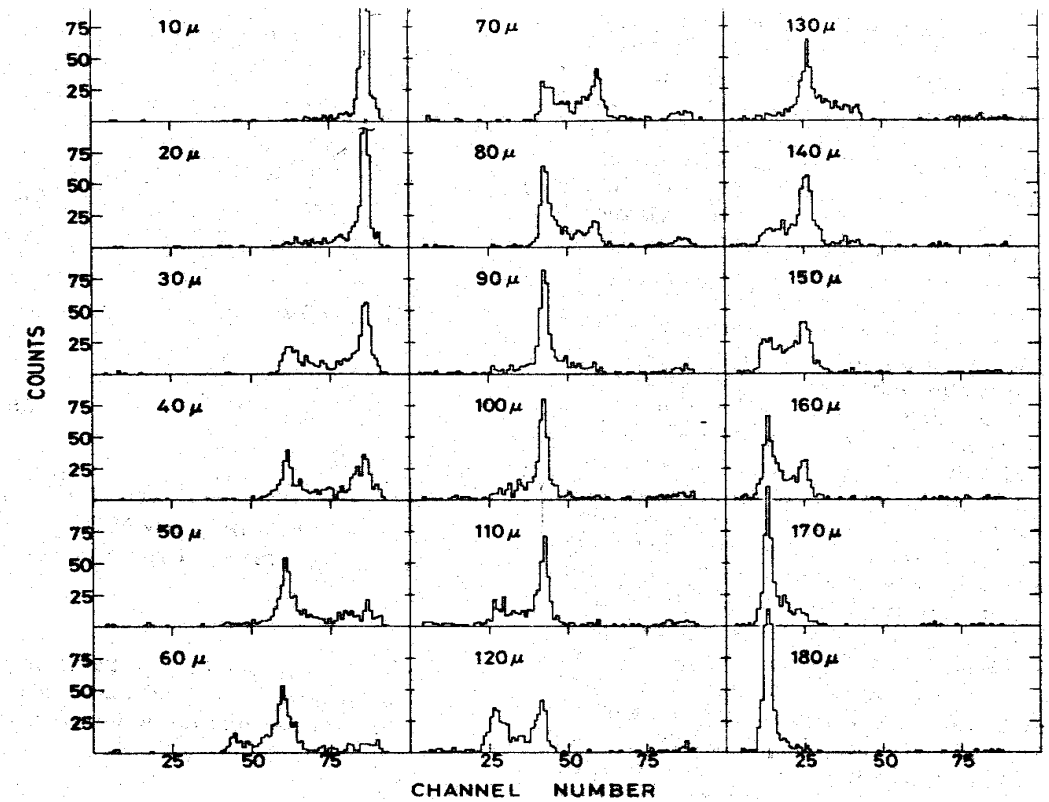

Ú reduction of the number of electronics channels with only a small degradation of the spatial resolution w.r.t. the detector with all strips read out

Detectors with capacitive charge division readout

A more recent, very good study of the signal collection and position reconstruction for the detectors with intermediate strips and 200 μm readout pitch

(M.Krammer, H.Pernegger, NIM A397 (1997) 232)

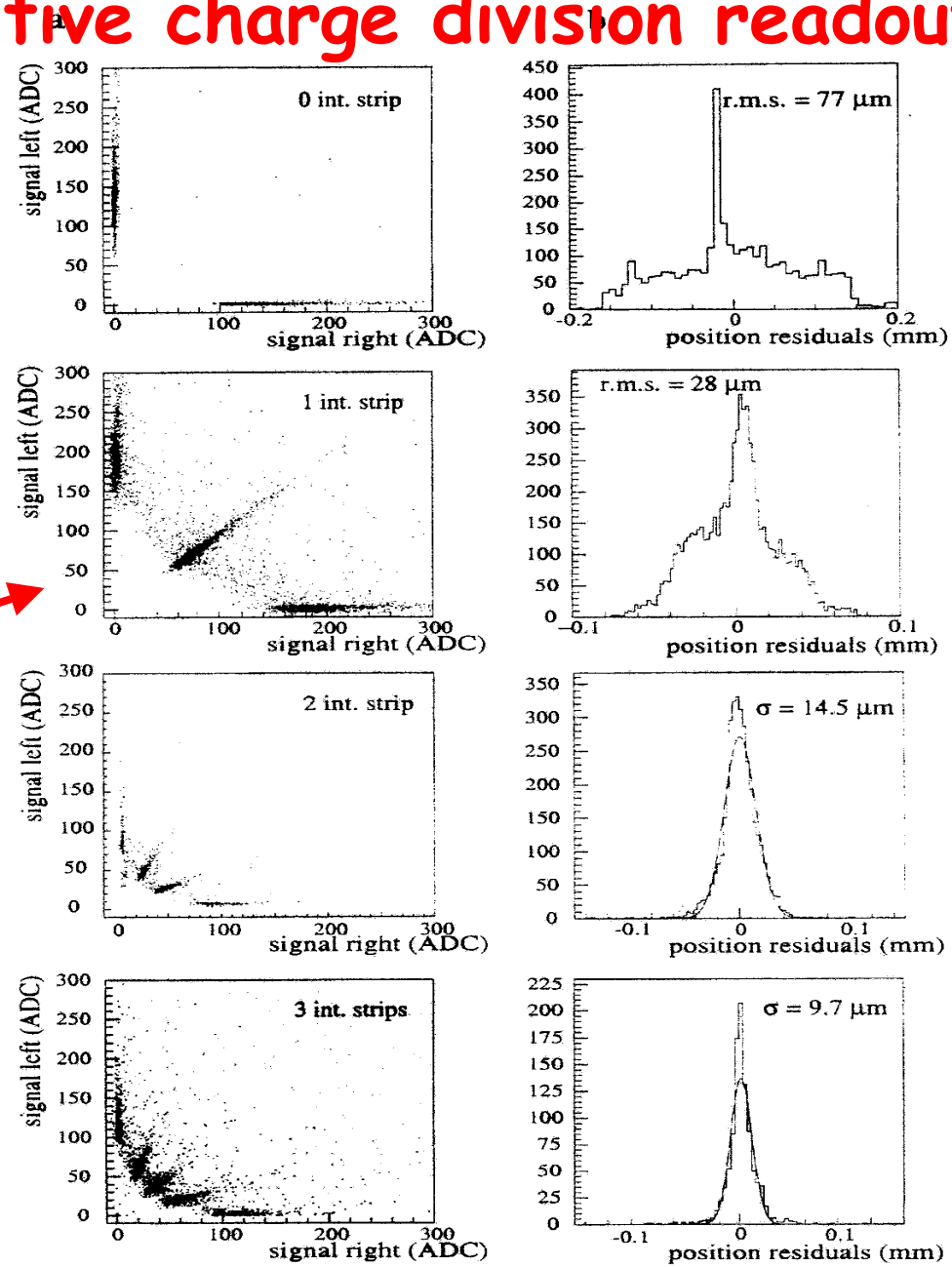

Comparison of detectors with zero, one, two and three intermediate strips: signals on the left readout strip versus signal on the right readout strip (left) and position residuals (right)

Silicon telescope in NA32 experiment at CERN

7 Silicon microstrip detectors to measure the incoming beam(B1 to B7), vertex detector consisting of 8 planes of microstrip detectors (V1 to V8) and of two CCDs for a precise tracking of secondary particles (P.Weilhammer, CERN-EP/86-54)

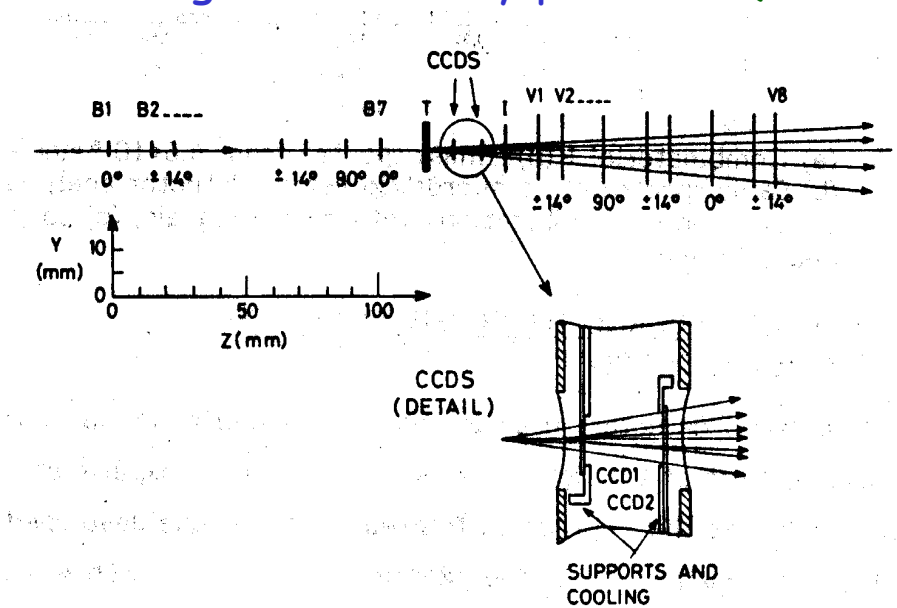

- This Silicon telescope gave the background rejection power in the range of 1:4000 to 1:40000 (depending on the decay topology) and allowed to study the charm baryons
- Spatial resolution of 2.5 μm was achieved for one of the microstrip detectors
- Resolution for the primary vertex reconstruction in beam direction obtained with microstrip detectors was equal to 130 μm

Silicon telescope in NA32 experiment at CERN

CCD sensors

Two-dimensional devices with the pixel size 22 μm x 22 μm, effective detector thickness 15 μm, readout speed of 1.5—3 MHz (R.Bailey et al., RL-82-120)

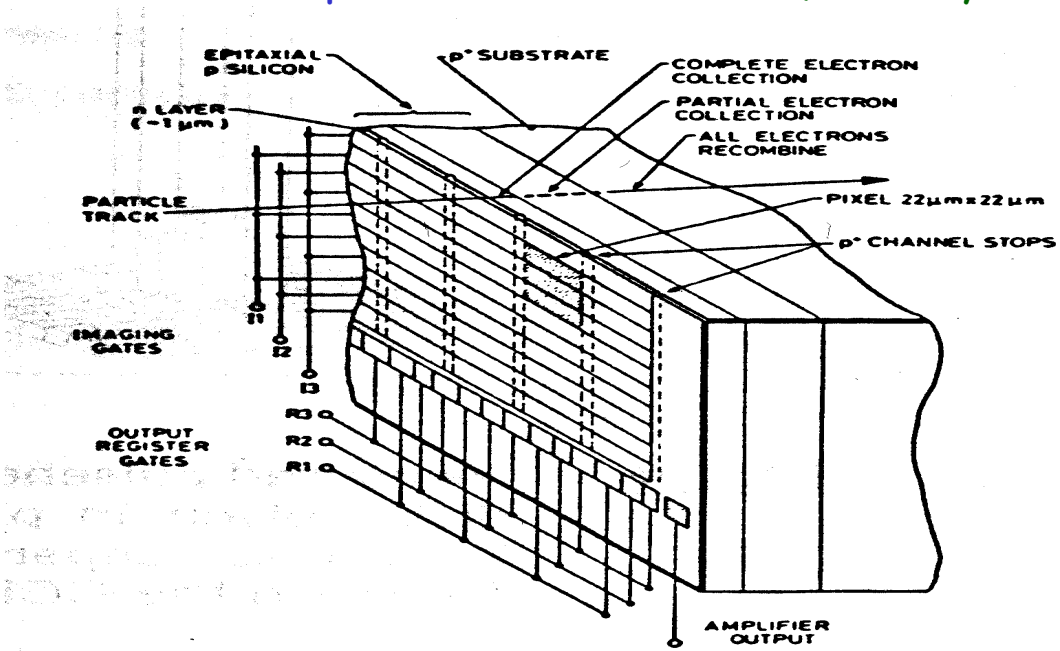

- spatial resolution of **5 μm in x and y**, double track resolution of 40 μm in space, resolution of vertex reconstruction in beam direction improved to 80 μm
- studies of charm particles with a lifetime close to 10^{-13} s (e.g. charm baryons) became possible

Silicon telescope in NA32 experiment at CERN

The active target

14 planes of Silicon strip detectors with 48 channels of 20 μm pitch mounted at distances of 500 μm along the beam and 2 planes of 400 μm pitch, 24 channels, 30 mm further downstream - the pulse height information from the active target was available to fast microprocessors within 8 μs for online analysis. (P.Weilhammer, CERN-EP/86-54)

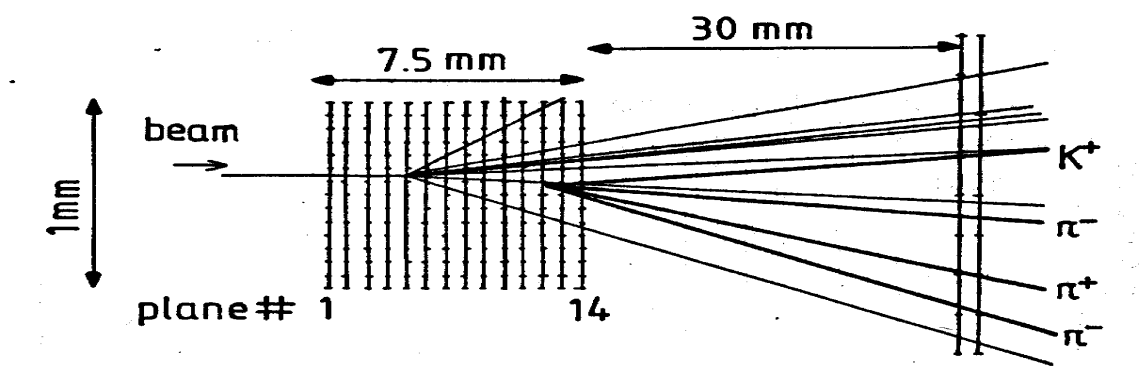

- The physics concept behind the active target: an online trigger which uses as a signature in the selection of charm decays the change of charge multiplicity downstream of the primary vertex in an event with decays of charmed particles

- Very useful as a tracking device but generally expectations were bigger than obtained results, e.g. rejection factor for non charm interactions was 1:6 instead of 1:25 (due to problems with online calibration, gains and noise instability), secondary vertex recognition for the separation down to about 3 mm instead of 1 to 2 mm.

Silicon telescope in NA32 experiment at CERN

Tests of Silicon drift chambers

Two-dimensional device - measurements of the position and the drift time (P.Hol, MPI-PAE/Exp.El.150)

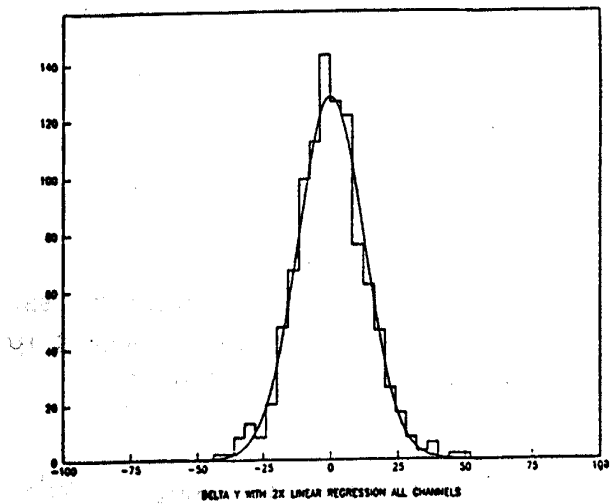

Fig. 29 Measured minus predicted coordinates in Si drift chamber. σ = 11 μm.

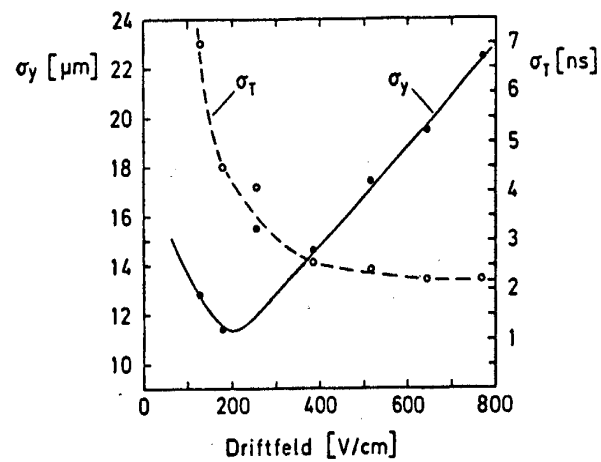

Fig. 30 Dependence of spatial and time resolution on drift field in Si drift chamber.

Ú The best spatial resolution obtained with this device was 11 μm Ú worse than for microstrips and CCDs

Other important fixed target experiments for charm studies equipped with Silicon: E691, E687, NA14, SELEX.....

Towards Silicon vertex detectors at colliders

- Basic requirements
- VLSI electronics
- Optimization of the detector geometry
- First projects

Towards Silicon vertex detectors at colliders

Basic requirements

Summarised in the one and a half page paper of Bernard Hyams (father of Silicon detectors for collider experiments) (B.Hyams, NIM 225 (1984) 606)

The objective: better than 10 μm precision and close tracks resolved down to 100 μm using big system of tens or hundreds of detector plaquettes

- "Multiple scattering in the beam pipe at LEP will limit the precision for particles with momenta less than ~ 5 GeV/c. It is essential to use light mechanical construction to limit further multiple scattering and nuclear interactions"
- "To reduce cabling (and cost!) the signals will be read out with a chip designed for this purpose; designated "Microplex". It will have 128 independent channels... The total chip width, including chip lines will be 6.4 mm, giving an average density of just over 50 μm per channel."
- "The individual detector wafers will be about 6 cm long and 2.5 cm wide. Their strips will be wire bonded in series, to form a 36 cm long total detector cell."
- "Thresholds are set and pedestals subtracted with standard circuits far from Multiplex, which communicates with the outside world via a commercial line driver chip.

Towards Silicon vertex detectors at colliders

VLSI electronics

First VLSI front-end chip for Silicon strips (T.Walker. S.Parker. B.Hvams, S.Shapiro, NIM 226 (1984) 200)

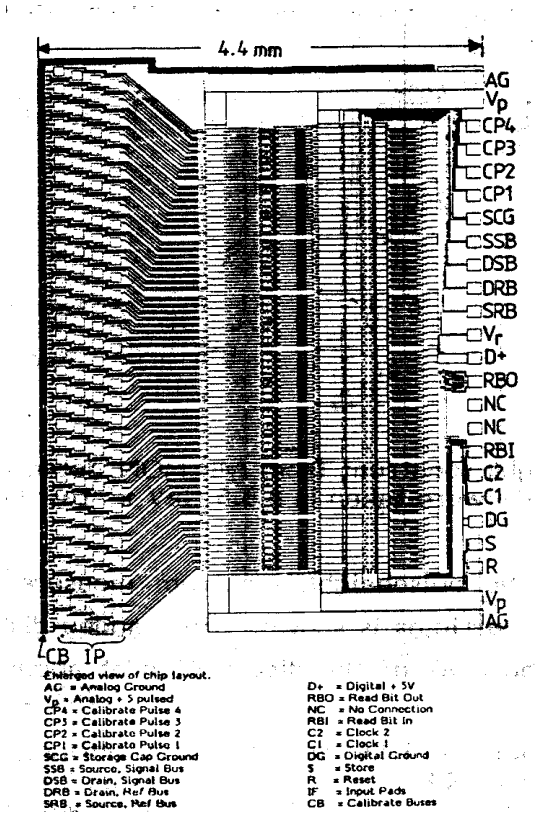

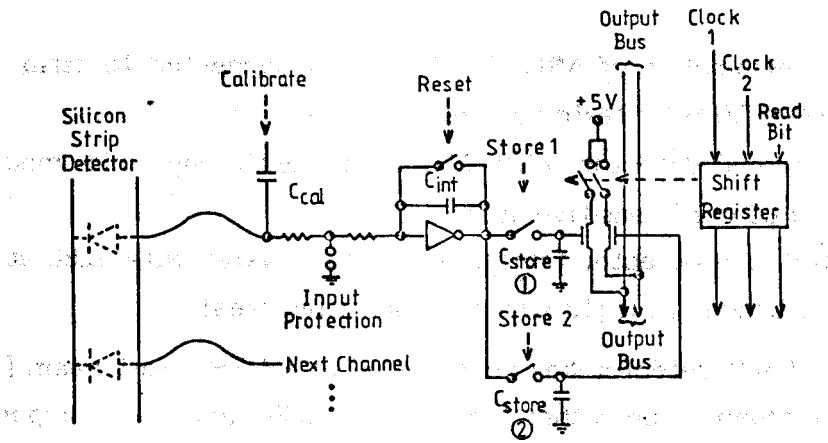

The chip of dimensions 4.4mmx6.4 mm holds 128 channels of charge sensitive amplifier designed to have an open loop gain of 500, a delay time of 10 ns and a rise time of 20 ns, at the end of data collection the store and reset switches are controlled by shift register, resulting in a sequential signal readout

The chip was produced in 5 μm nMOS technology Ú problem with a big power dissipation (14 mW/channel for the improved version) Ú next chips produced in CMOS technology

Towards Silicon vertex detectors at colliders

Optimisation of the detector geometry

Physics aspects of the vertex detector geometry for the collider experiment are summarized in H.Dijkstra et al., NIM 277 (1989) 160.

- The quantity of most interest is the accurate extrapolation of track to the vertex region and subsequently the accurate reconstruction of vertices.
- The impact parameter is defined as the distance of closest approach of a given track to the primary interaction point. For tracks coming from the primary vertex it should be zero but the resolution effects smear this.
- The square of the impact parameter resolution is often parameterised as the sum of two quadratic terms:

$$\sigma_{IP}^2 = \sigma_{asympt}^2 + \left(\frac{\sigma_{ms}}{p_t}\right)^2$$

- The first term describes any uncertainties in the track reconstruction due to the intrinsic resolution of the sub detectors used in the track fit and limits the precision especially at higher momenta.
- The second term is due to multiple scattering in the material in front of the measured points which limits the resolution especially for low momentum tracks.

Towards Silicon vertex detectors at colliders

Optimization of the detector geometry

Uncertainties in the track reconstruction due to the intrinsic resolution of the sub detectors used in the track fit.

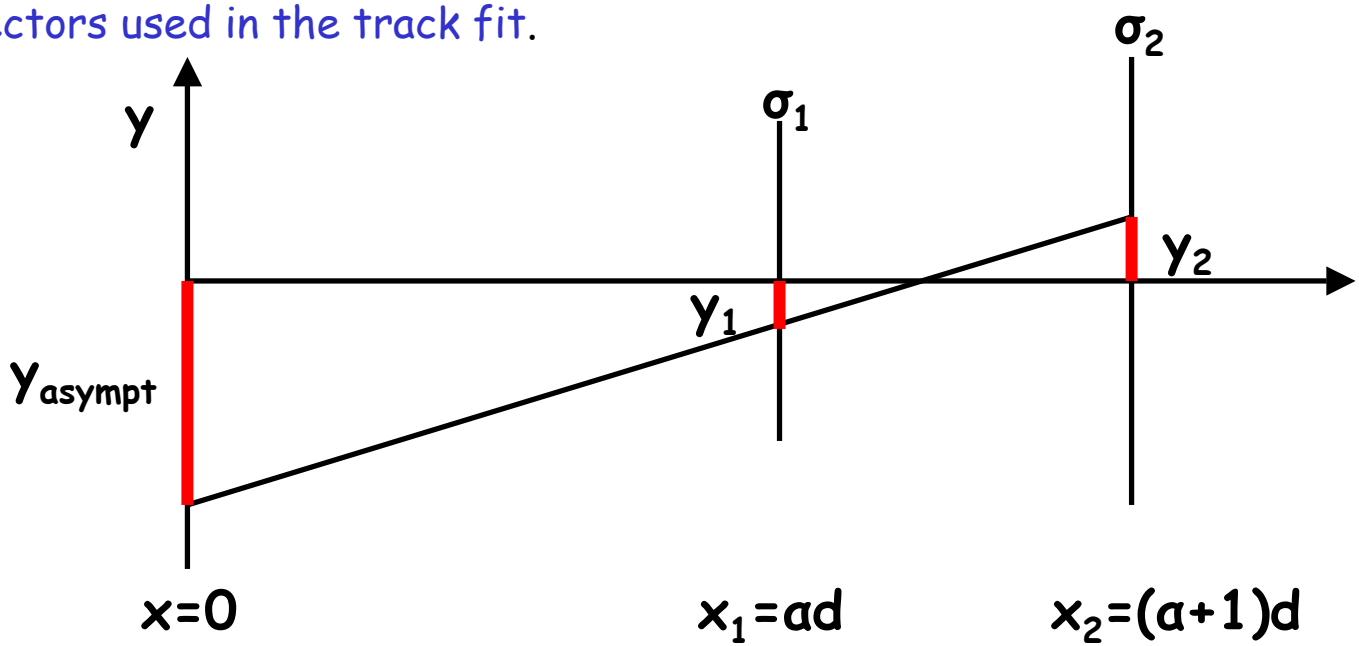

Model: track is measured at two points: x_1 and x_2 , d is the lever arm of the detector system it is easy to find that the asymptotic extrapolation precision equals to:

$$\sigma_{sympt} = (\alpha+1)^2 \sigma_1^2 + \alpha^2 \sigma_2^2$$

$$\alpha = \frac{x_1}{d}$$

Towards Silicon vertex detectors at colliders

Optimization of the detector geometry

Conclusions from the formulas on previous pages:

- The material in front of the detector and of the detector itself should be kept minimal
- The first point should be measured precisely, as close as possible to the interaction point
- The lever arm of silicon detectors should not be too small and the second point measured with a similar precision to obtain an adequate angular resolution and the impact parameter precision governed by the measurements in Silicon

In this scenario the additional measured points do not improve significantly the impact parameter precision but contribute to the pattern recognition and to the measurement of the track curvature (if detector is placed in the magnetic field).

When the lever arm of the Silicon vertex detector is too short, other detectors contribute to the impact parameter resolution, which can be degraded due to the additional misalignment and the difficulties in pattern recognition

Towards Silicon vertex detectors at colliders

First projects

Developed since early eighties:

- Microstrip vertex detector for MarkII experiment in SLAC (equipped with single sided Si detectors)
- Microstrip vertex detector for DELPHI experiment at LEP (at the beginning developed in a close collaboration with SLAC physicists)
- Microstrip vertex detector for ALEPH experiment at LEP (an ambitious project aiming for double sided Si detectors since the beginning)
- CCD vertex detector for SLD experiment in SLAC (an even more ambitious project, requiring a longer R&D program)

A bit later:

- Microstrip vertex detector for CDF experiment at Fermilab

Silicon strip detector for Mark II experiment

Ch.Adolphsen et al.., SLAC PUB 4452, IEEE Trans. Nucl. Sci. 35 (1998) 424

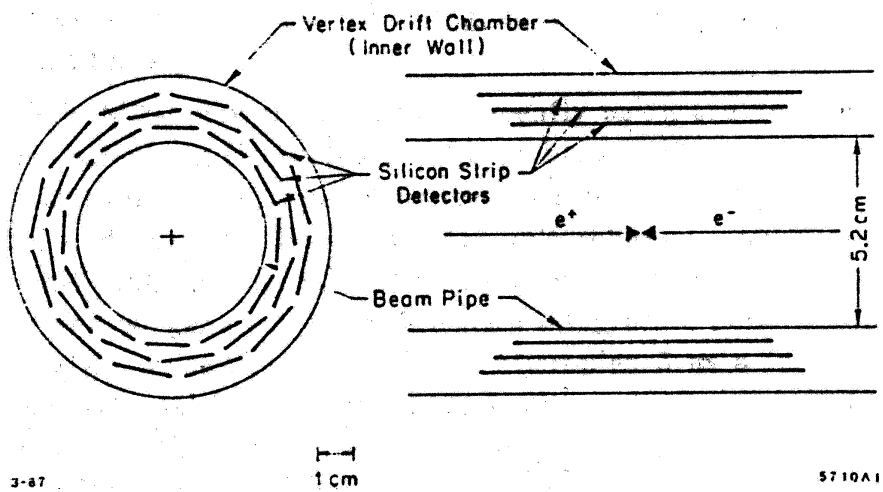

Table 1

Properties of the Silicon Detectors

Detector Property	layer 1	layer 2	layer 3	units
layer radius	30	34	38	mm
strip pitch	25	29	33	μm
number of strips	512	512	512	
active length	72	82	90	mm
total length	75	85	94	mm
active width	13	15	17	mm
total width	14	16	18	mm
thickness	300	300	300	μm
strip width	8	8	8	μm
depletion voltage	~ 50	~ 50	~ 50	V
capacitance* (to other strips)	8.2	8.8	9.3	pF
capacitance* (to backplane)	0.6	0.8	1.0	pF

* calculated.

The smallest among the collider vertex detectors —due to the small radius of the SLC accelerator

Three layers, each with 12 detectors, altogether 18432 readout channels, Microplex nMOS chips at both ends of the modules, every strip read out

- Asymptotic impact parameter resolution better than 10 μm

The DELPHI vertex detector

will be used to illustrate the important steps in the design, construction and running the Silicon vertex detector

based on 12 years of running experience!

- Subsequent upgrades
- Silicon sensors
- Mechanical structure
- Electronics
- Online analysis
- Detector monitoring during data taking
- Survey and alignment
- Performance

DELPHI Silicon vertex detector

Subsequent upgrades

N.Bingefors et al.,NIM A328 (1993) 447, V.Chabaud et al..,NIM A368 (1996) 314, P.Chochula et al..,NIM A412 (1998) 304.

1989-1990
192 detectors (all s-s)
55296 readout channels

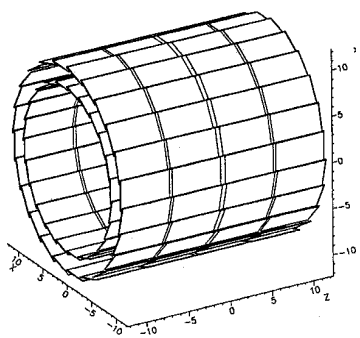

1991-1993
288 detectors (all s-s)
73728 readout channels

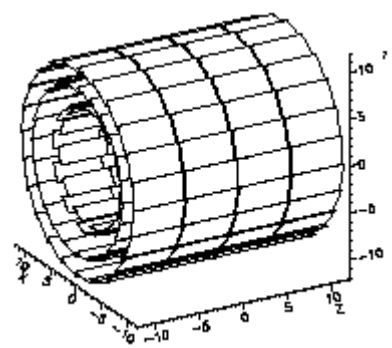

1994-1995
288 detectors (96 s-s, 192 d-s)
125952 readout channels

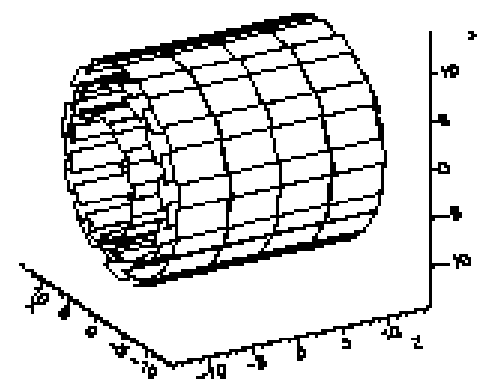

1996-2000

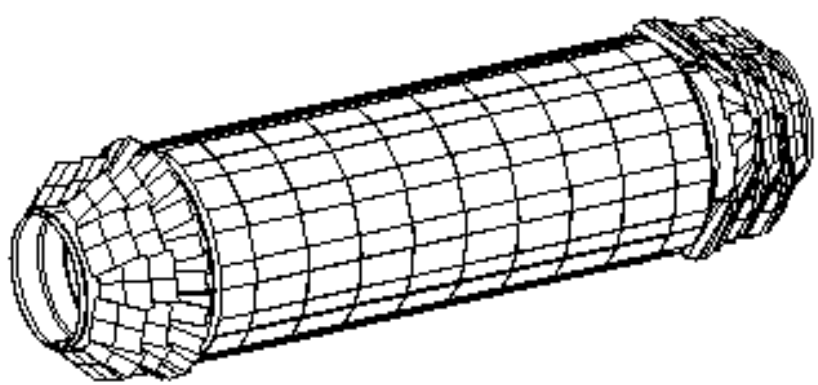

888 detectors,
1399808 readout channels:

736 strip detectors with
174080 readout channels

1225728 pixels

DELPHI Silicon vertex detector

Silicon sensors

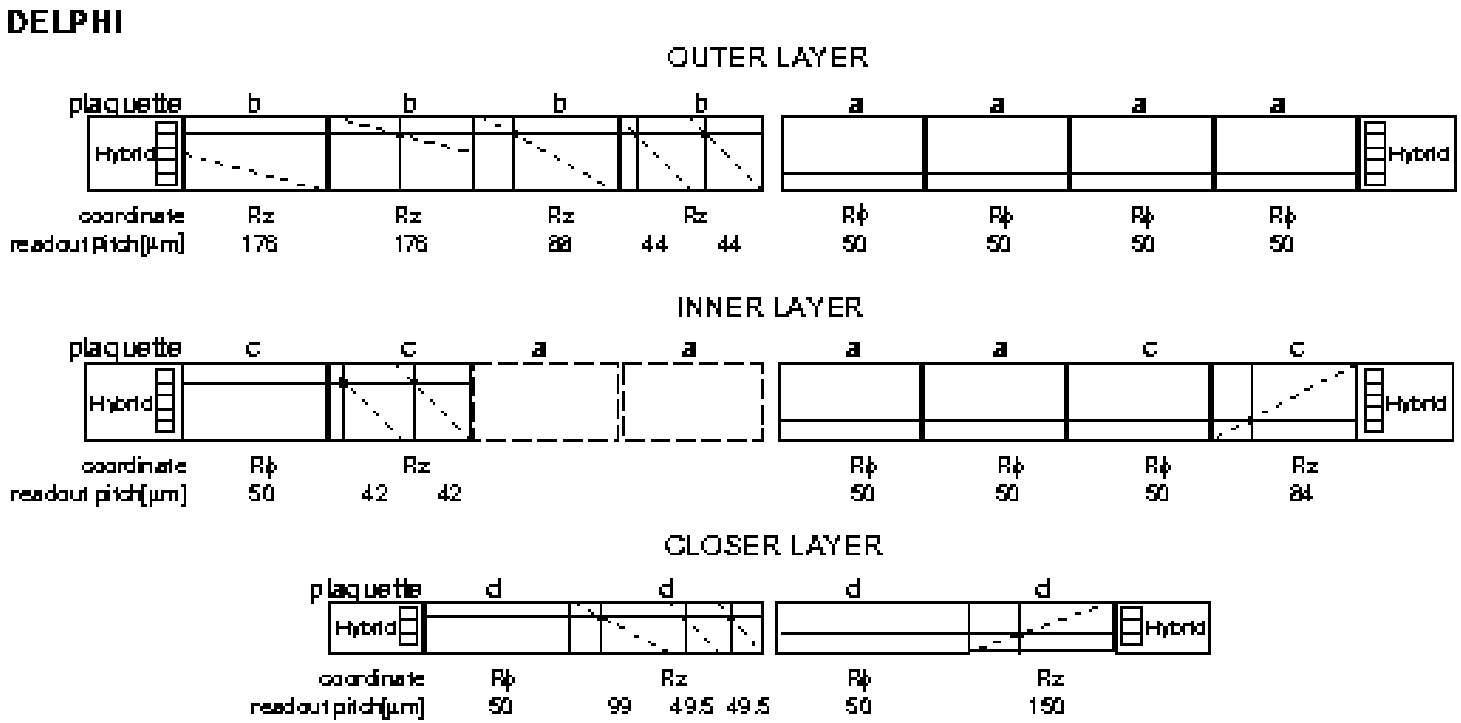

Ú **A big variety of solutions:** single sided and double sided detectors, double metal layer for routing signals, flipped modules, different diode and readout pitches, different schemes of strip multiplexing, strip separation on the n-side by p-stops or field plates, biasing through the FOXFET or polisilicon resistors

DELPHI Silicon vertex detector

Mechanical structure

The aim: as light as possible in the detector active region to minimize the multiple scattering contribution in the impact parameter error

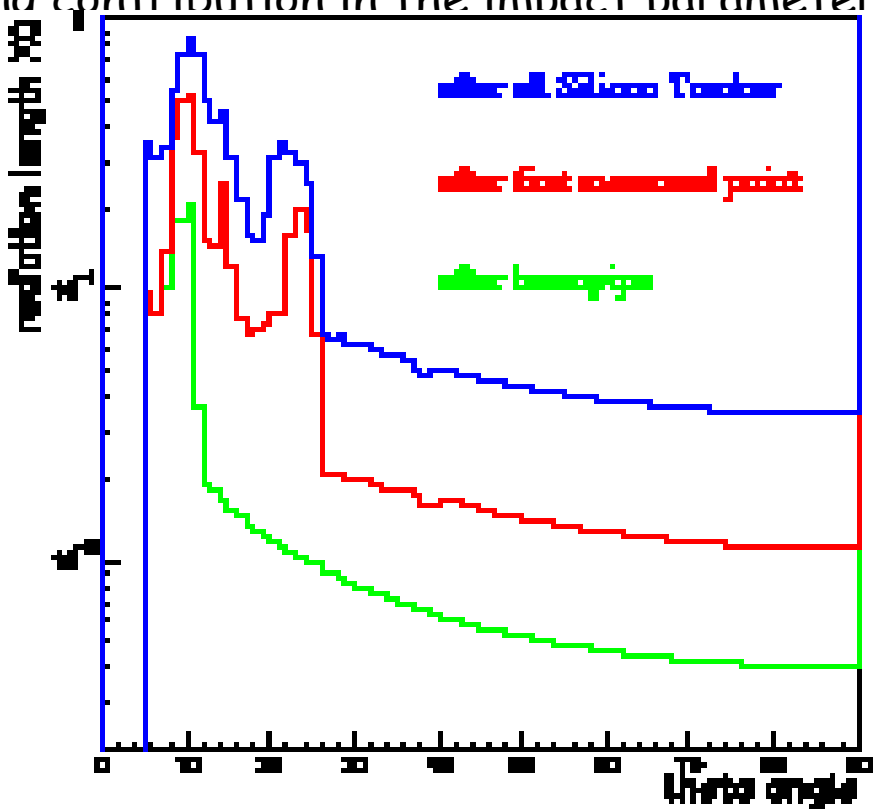

Ú Composite materials used for the module support structures, signals routed to the readout electronics outside the vertex detector active region, the Al end-rings also outside

DELPHI Silicon vertex detector

Mechanical structure

but: a bad surprise with the kevlar supports used for the modules of the innermost layer in 1994 — they were changing shape according to the humidity changes (in October/November) causing a degradation of the measurements resolution

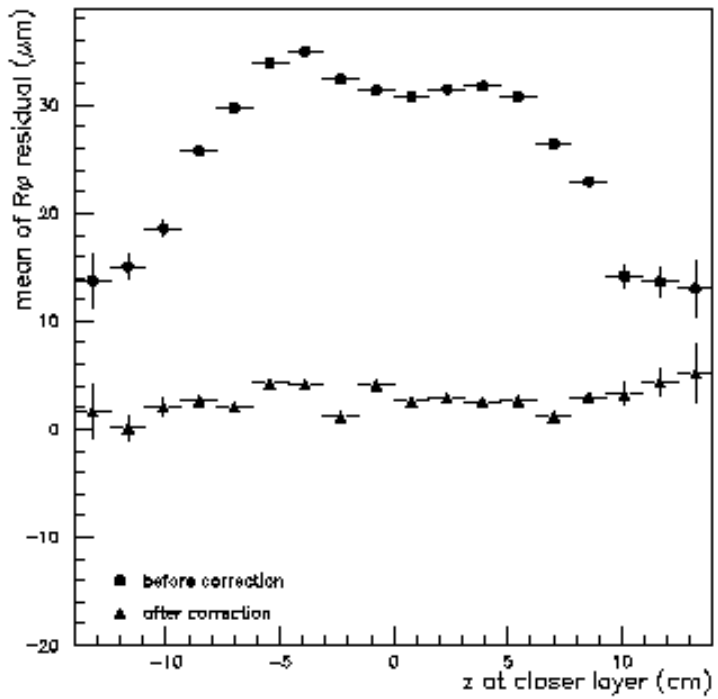

Ú The carbon-carbon beams had been glued on top of the kevlar supports during the 1994/1995 winter shutdown

DELPHI Silicon vertex detector

Electronics chain for strip detectors

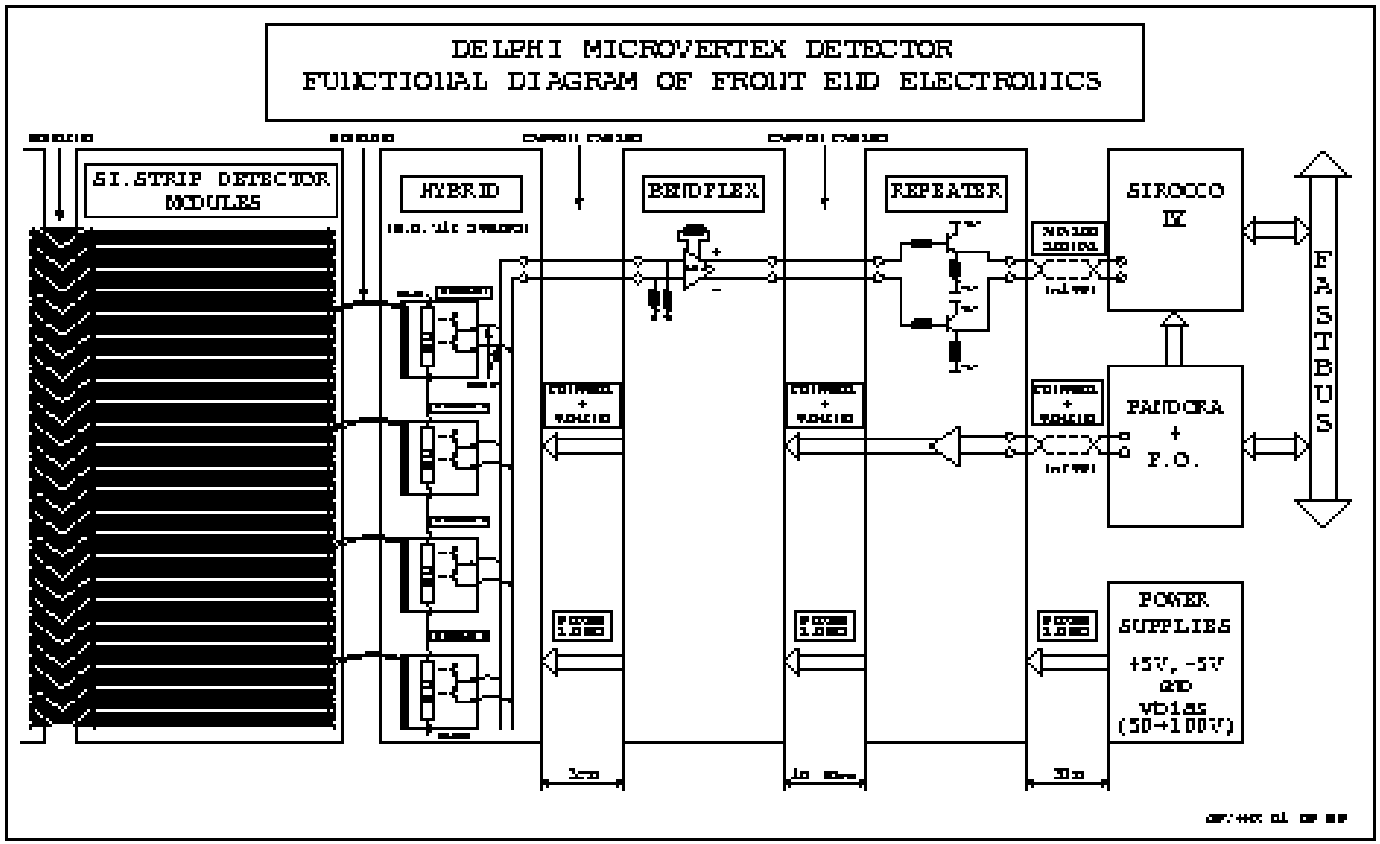

Ú starting from the readout hybrid, the differential multiplexed output from the readout chips (CMOS chips MX6 and TRIPLEX) is transferred by a kapton cable to the printed circuit board combining "bendflex" and "repeater". These boards contain buffers,control circuits and power lines and communicate with the readout systems in the barracks approximately 20 m away (SIROCCOs).

DELPHI Silicon vertex detector

Online analysis

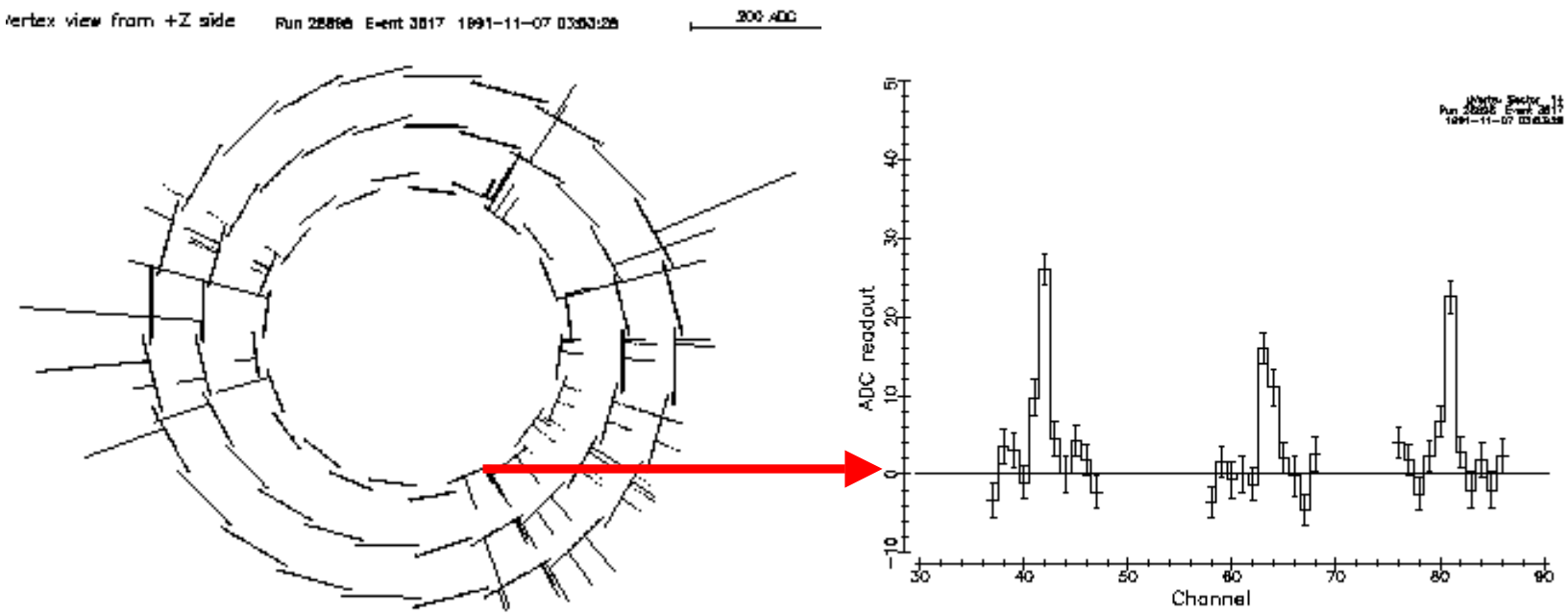

Ú At each second level DELPHI trigger all analogue values (174080 at present) from the strip detectors are presented to the readout system and are analysed in real time by an online computer farm made of 128 DSP56001 Digital Signal Processors. Each DSP receives between 1280 and 1536 analogue readouts for the analysis. It takes about 1.6 ms to read out all the strip detectors. Each DSP measures the pedestal and noise of every channel ascribed to it. The channels with significant signal are chosen, and signals on adjacent channels are correlated to match the typical charge spread pattern. The zero-suppressed data are collected from these modules by a standard DELPHI readout processor. The suppression ratio is of the order of 5/1000.

DELPHI Silicon vertex detector

Detector monitoring during data taking

- From the safety point of view the temperature of the detector is the most critical parameter — the temperature variations seen on the inlet and outlet of the cooling are between 4^0C and 7^0C and are stable to 0.1^0C
- Bias voltages and currents, low voltages to electronic drivers and ambient humidity are also continuously recorded
- Online data quality checking allows to detect quickly dead, noisy or inefficient modules
- A simplified track search allows for online monitoring of the residuals between tracks and hits, providing the information on the stability of the layers

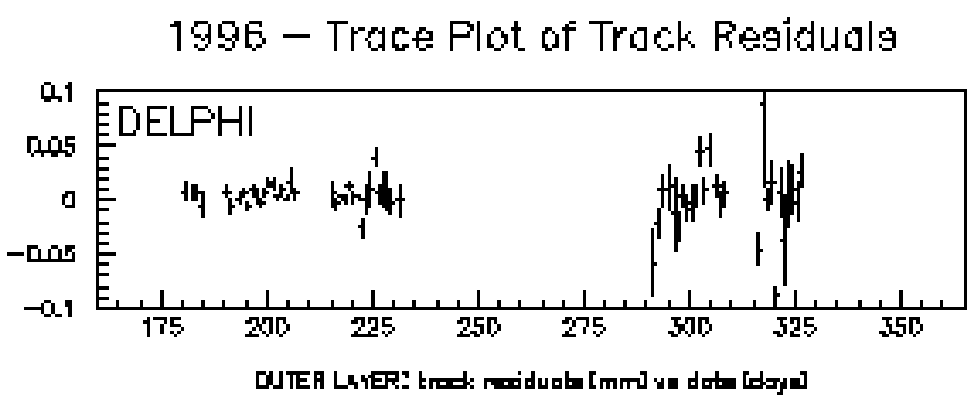

The two LEP periods at 161 GeV and 172 GeV can be distinguished, being separated by the summer break to install further cavities in LEP.

DELPHI Silicon vertex detector

Alignment

To avoid propagation of errors from the other tracking detectors, the only measurement taken from outside the Silicon detector when performing the alignment is the momentum of the tracks.

The alignment is performed in four steps:

- An optical and mechanical survey of the individual components and of the whole structure of each half-shell — the intrinsic resolution of the survey was below 10μm but the overall precision of the detector descriptions was limited by the deformations which occurred after the survey.
- The second step uses cosmic tracks to commission the detector before the start of LEP and to make a rough prealignment of the two half-shells w.r.t. Each other and to the other tracking detectors of DELPHI.
- x The last two steps (one before 1996), final alignment of the barrel and of the Silicon end-caps, uses tracks from e^+e^- collisions, to perform four tasks: parametrisation and correction of the mechanical deformations, refinement of the survey for each half-shell, relative alignment of the two half-shells and external alignment of the whole Silicon detector

DELPHI Silicon vertex detector

Alignment

Rφ

Rz

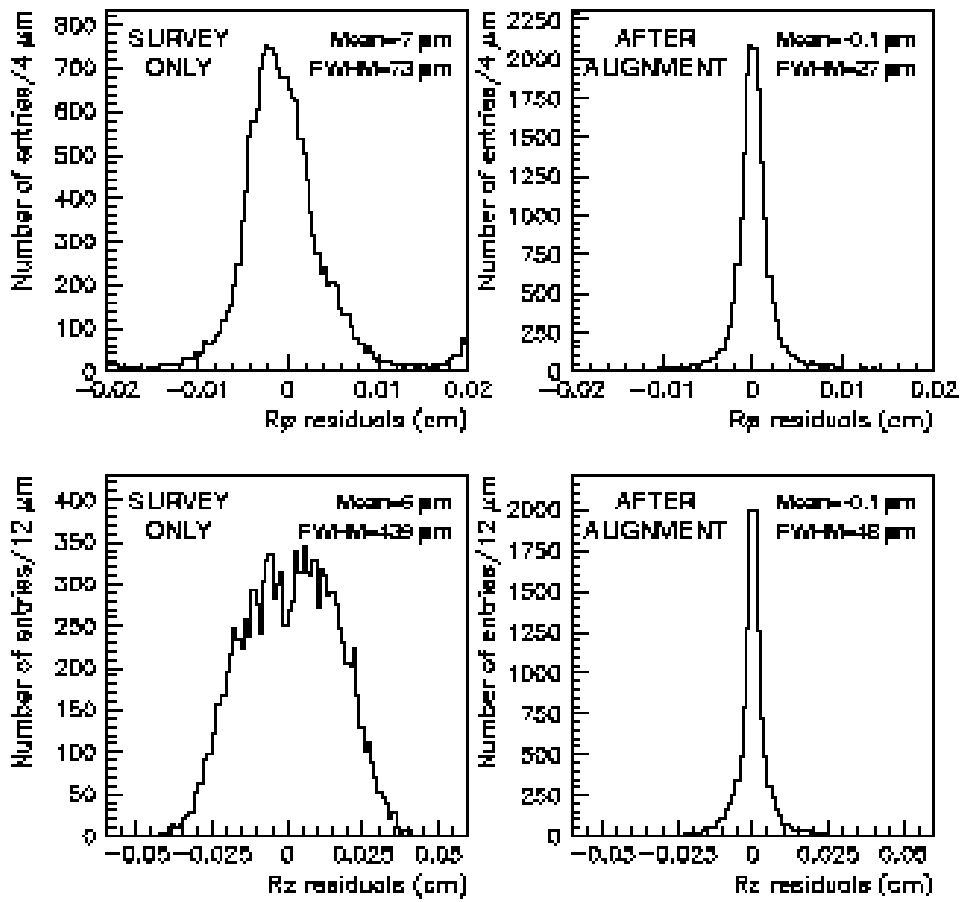

The residuals between two hits associated with tracks passing through the overlaps between modules — after the survey (left) and after the full alignment(right)

DELPHI Silicon vertex detector

Alignment

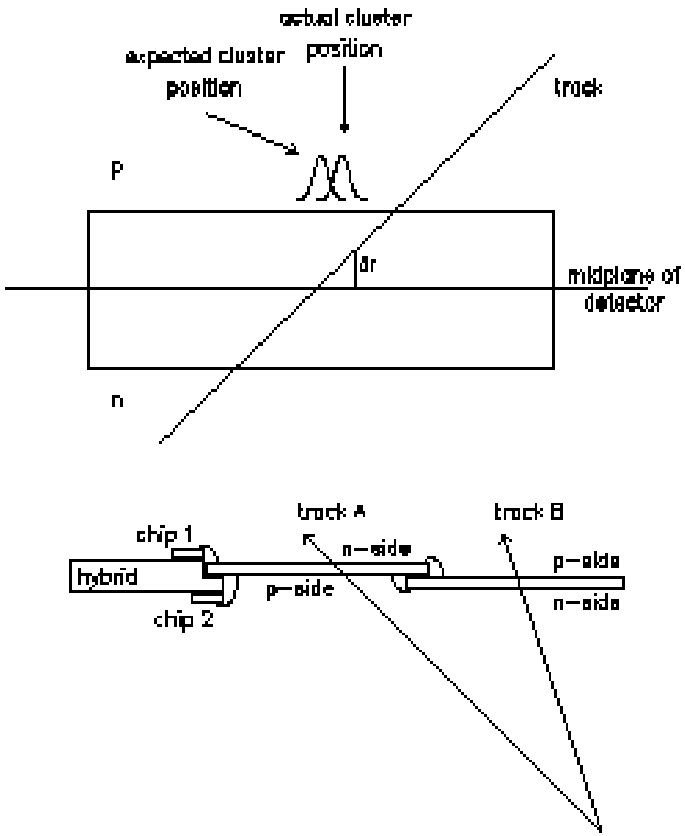

For the first time observed in data from the 1994-95 detector

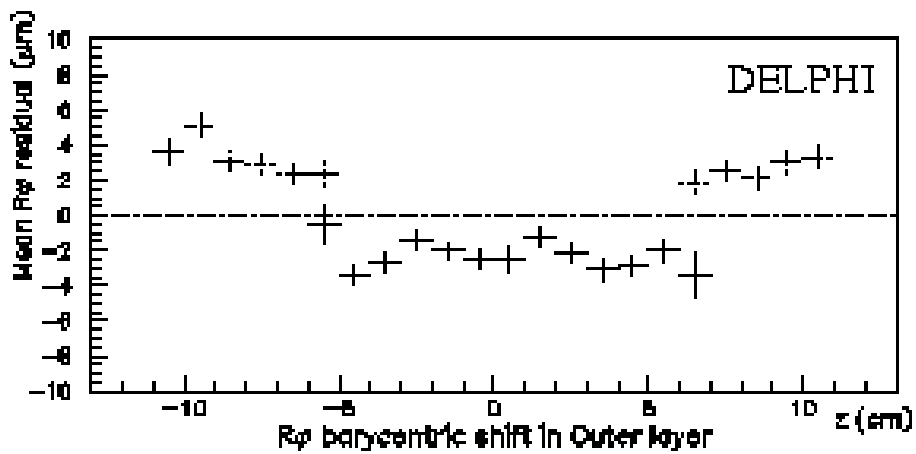

The barycentric shift — the barycentre of the holes (and electrons) created by the particle crossing a detector and collected by the implant lines are shifted towards the p-side

DELPHI Silicon vertex detector

Detector performance

- High efficiency of the detector — 93.5%, 98% and 99% chance for finding Rφ hit associated with a track for the three layers in 1996 data, 99.4% of tracks with two Rφ hits associated
- The most probable signal over noise (S/N) values for the minimum track length in the silicon as a function of the strip length seen by the amplifier

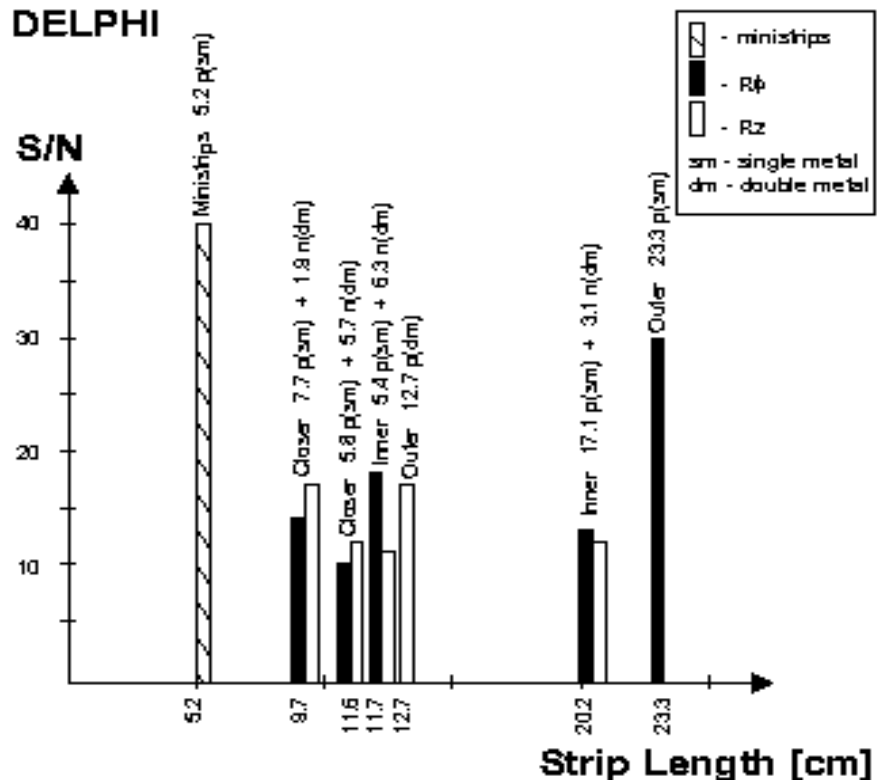

DELPHI Silicon vertex detector

Detector performance

- A hit precision for perpendicular tracks crossing the outermost layer (after the alignment) was measured to be 9 μm in the Rφ projection and 11 μm in the Rz projection
- Double track resolution - of the order of 3-4 times the readout pitch
- Impact parameter resolutions as a function of momentum

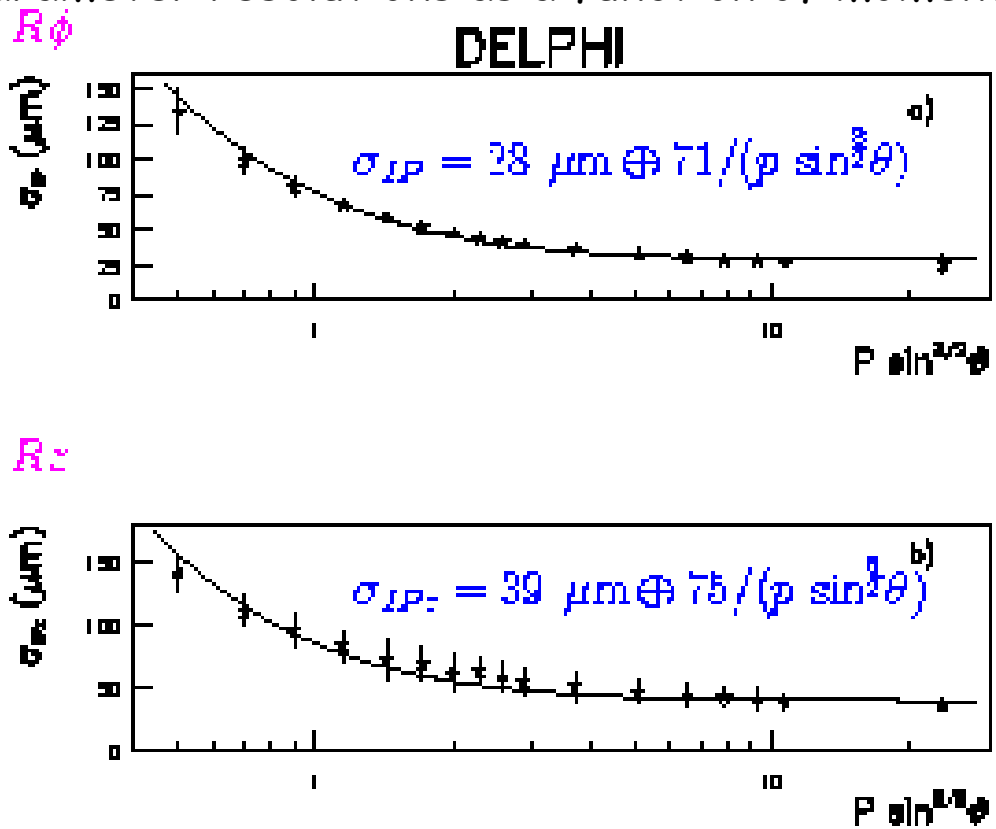

Θ coverage:
$25^0 - 155^0$

DELPHI Silicon vertex detector

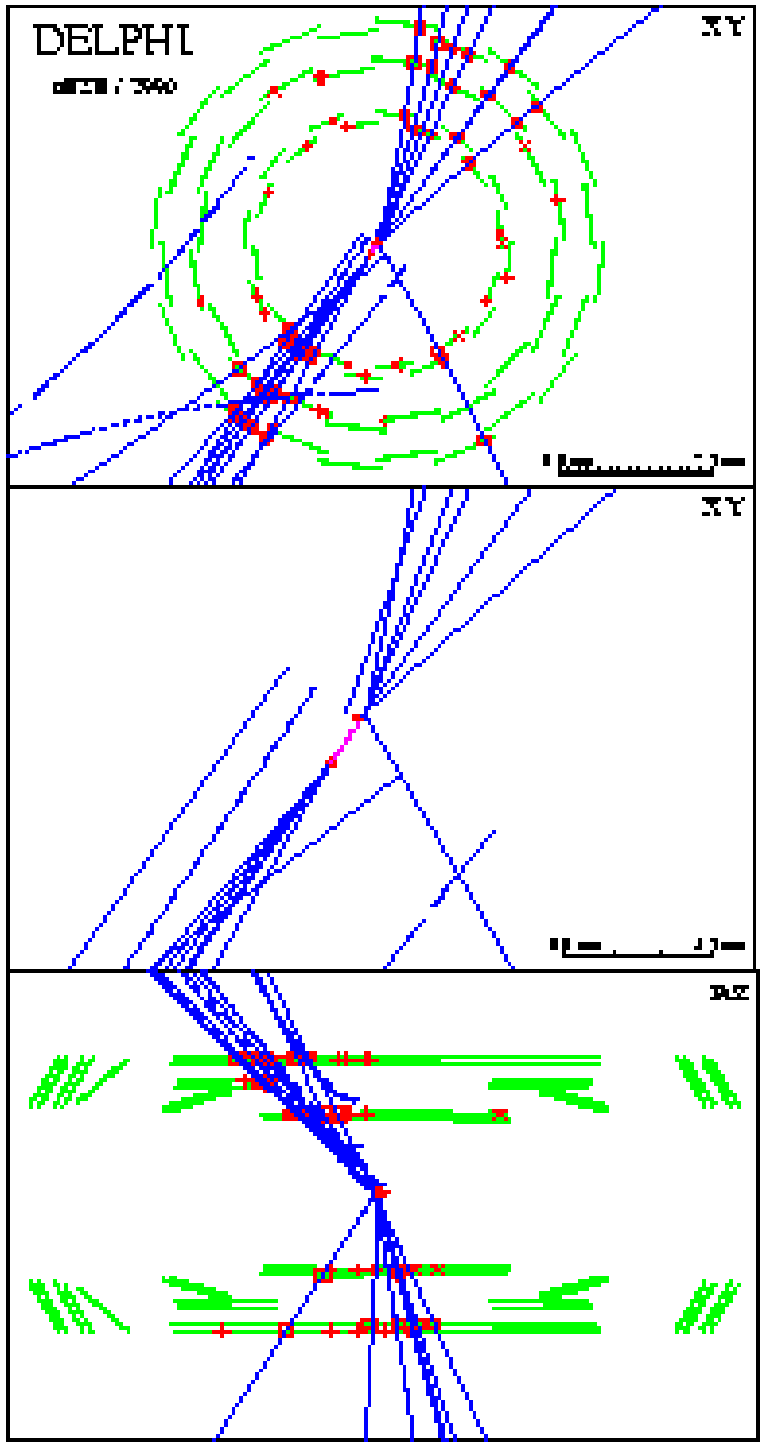

The top two views show the Rφ projection on two different scales. The displaced vertex is clearly seen. The bottom view displays the Rz projection.

Pioneering big systems with different types of silicon detectors

- Strip detectors in the experiments at LEP
- CCD's in the SLD vertex detector in SLAC
- Pixel detectors in the DELPHI experiment at LEP
- Silicon drift chambers in the heavy ions experiments

Silicon strip detectors at LEP

Vertex detectors at LEP2, (K.Österberg, NIM A435 (1999) 1)

ALEPH

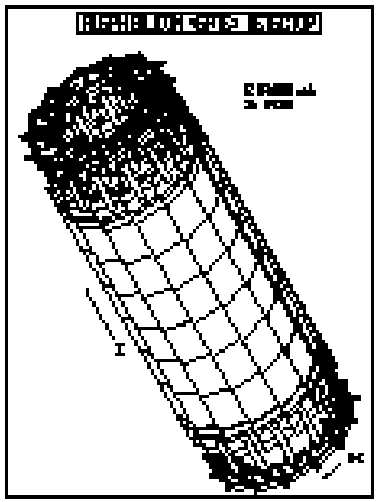

DELPHI

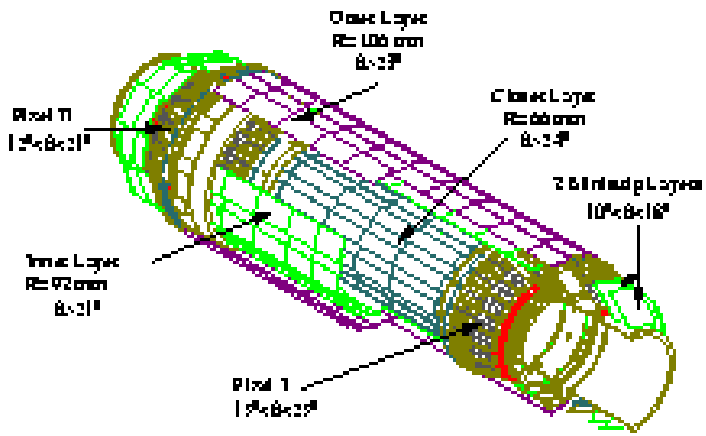

L3

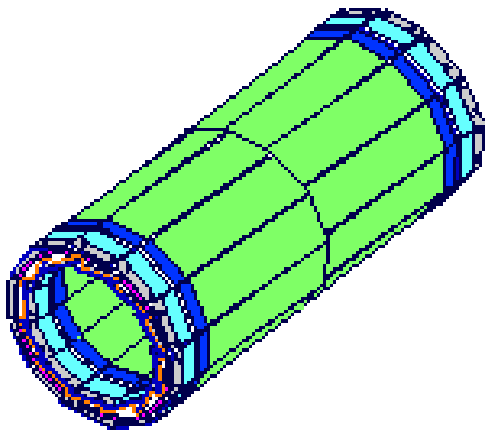

OPAL

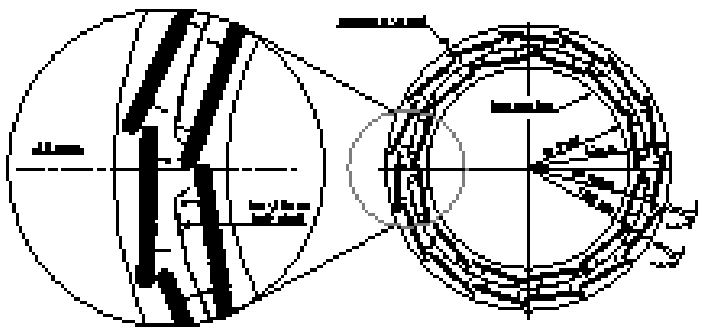

Characteristics of the vertex detectors at LEP2

experiment	ALEPH	DELPHI	L3	OPAL
# layers	2	3	2	2
radii [cm]	6.3, 11.0	6.6, 9.2, 10.6	6.4, 7.9	6.1, 7.4
modules/layer	9, 15	24, 20, 24	12	12, 15
sensors/module	6	4, 8	4	5
module length [cm]	40	28, 48	28	30
max. $\lvert\cos\theta\rvert$	0.93, 0.95	0.91, 0.93	0.93, 0.93	0.89, 0.93
overlaps [%]	5	12-15	0-12	0
channels	95,000	150,000	73,000	65,000
front-end chips	MX7-RH	MX6, TRIPLEX	SVX-H3	MX7, MX7-RH
AC coupling	capacitor chip	integrated	capacitor chip	integrated
sensor type	double-sided	double + single	double-sided	single-sided
z coordinate readout	polyimide fanout	double-metal	kapton rerouting	glass point
readout pitch [μm]	ϕ:50, z:100	ϕ:50, z:44–176	ϕ:50, z:150, 200	ϕ:50, z:100
material# [% of λ_0]	1.5	3.1	1.2	1.5
support structure	hollow carbon fibre	carbon honeycomb	carbon honeycomb	beryllium
cooling	water+air	water	water	water+nitrogen
stability monitor	laser spots+particles	particles	laser spots+particles	particles
sensitive area [m^2]	0.96	1.37+0.41(VFT)	0.52	0.53

Performance figures for the vertex detectors at LEP2

experiment	ALEPH	DELPHI	L3	OPAL
signal-to-noise ratio ($R\phi$)	31	10-28	18	24/29
signal-to-noise ratio (z)	18	10-28	18	20/24
impact param. resol. ($R\phi$) [μm]	34*	25	30	18
impact param. resol. (z) [μm]	34*	34	130	24
multiple scatt. term# [μm GeV/c]	70	70	80	100
point resolution ($R\phi$) [μm]	10	8	8	8-10
point resolution (z) (at 90°) [μm]	15	11	20	10-12

* Estimated from fits with one constant term and one proportional to $1/(P \sin^{3/2} \theta)$, where P is the momentum and θ the polar angle.

\# ALEPH quotes the resolution for a three dimensional impact parameter

Pixels vs strips

Much easier pattern recognition for pixels than for double-sided strip detectors í essential for a standalone pattern recognition

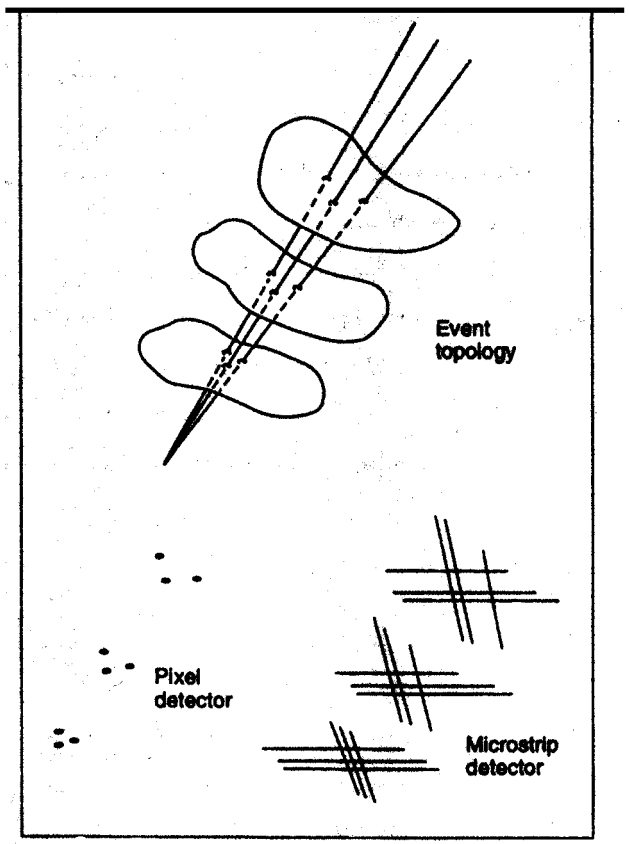

Pixel surface can be smaller than strip surface í necessary for a very high occupancy, e.g. in jets at TESLA (linear accelerator project)

fraction of overlapping hits vs resolution @ R = 2.5 cm

strips

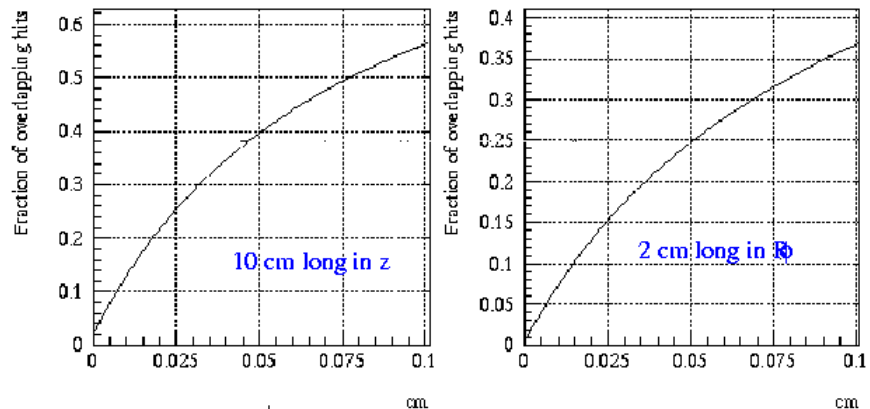

pixels

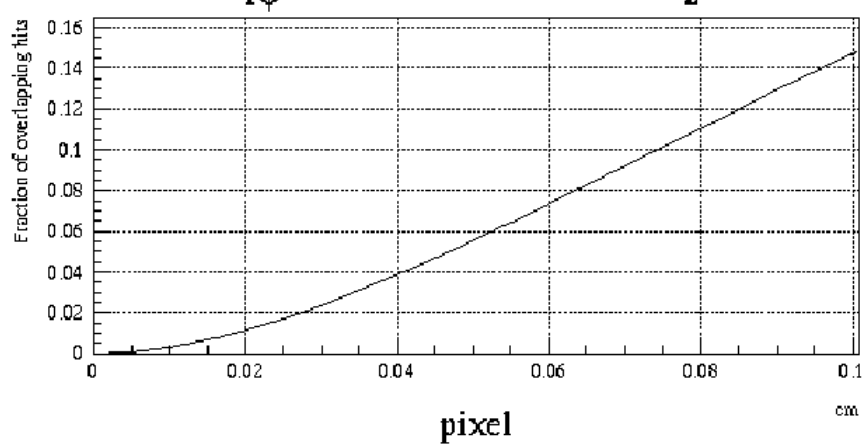

CCDs in the vertex detector of SLD experiment

At the SLAC Linear Collider

K.Abe et al., SLAC-PUB-7385, NIM A400 (1997) no.2/3, pp. 287

- Two vertex detectors based on CCDs had been working in the SLD experiment at the SLAC Linear Collider: VXD2 since January 1992 and VXD3 since January 1996

VXD2 - 120 Mpixel, detectors were assembled from a standard commercial imaging CCD of area 1 cm^2 and pixel size 22x22 μm^2

Performance like for the best LEP vertex detector

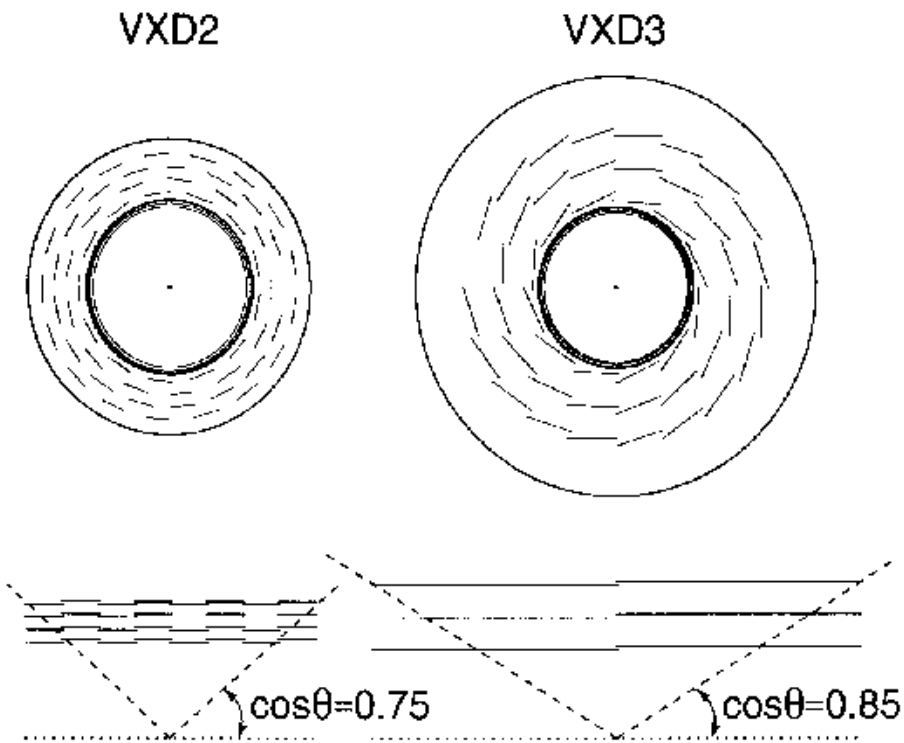

CCDs in the vertex detector of SLD experiment

x VXD3 — the state-of-art vertex detector at e+e- collider, 307 Mpixel of the dimensions 20x20 μm, big detectors, overlaps between ladders, first measured point much closer to the interaction point than for the LEP detectors, sufficient lever arm, reduced multiple scattering contribution ... but relatively slow (miliseconds for the whole readout

Ú **Unprecedented performance**:

position resolution 4 μmin x and y

impact parameter resolutions

$$\sigma_{R\varphi} = 9 \oplus \frac{33}{p \sin^{3/2}\theta} \mu m$$

$$\sigma_{Rz} = 17 \oplus \frac{33}{p \sin^{3/2}\theta} \mu m$$

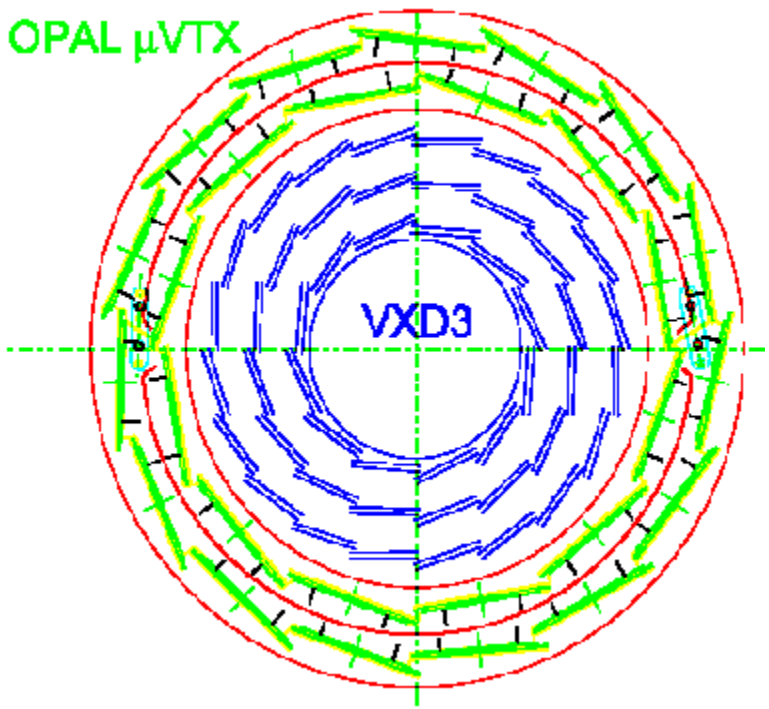

Pixel detectors in DELPHI at LEP2

The aim: tracking improvement at small polar angles

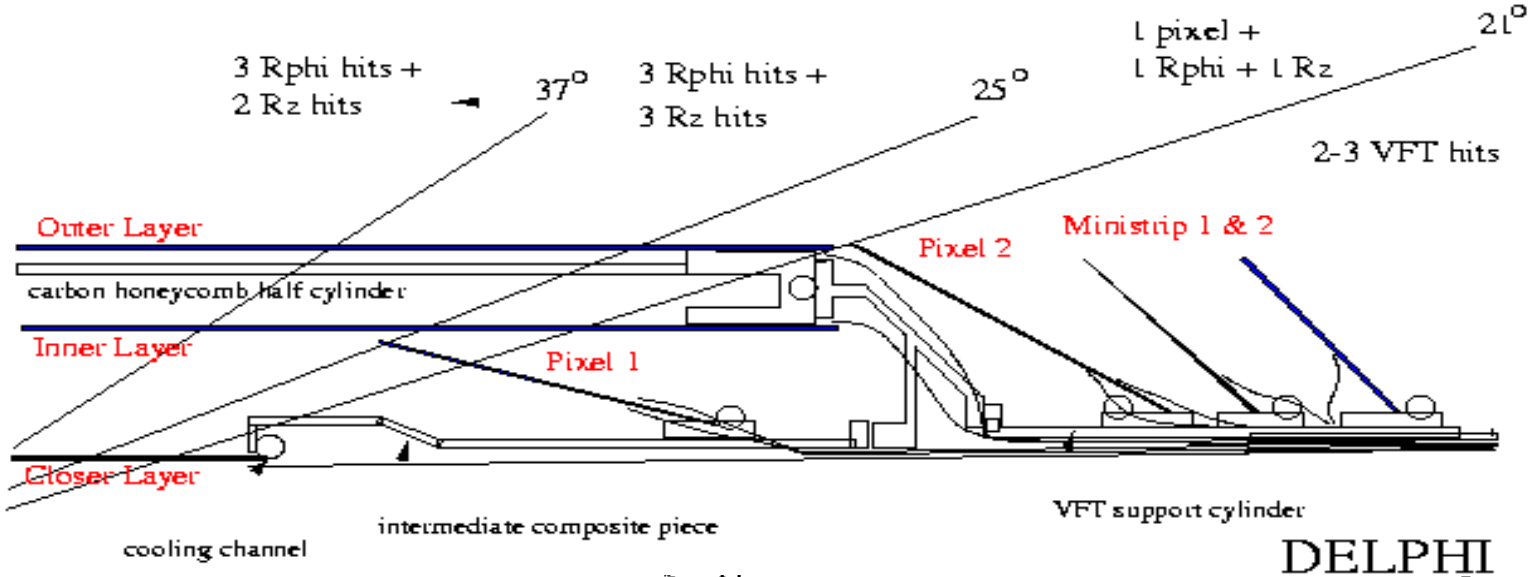

Relatively big pixels: 330μm x 330μm, pixels and ministrips with a modest position resolution but providing a standalone pattern recognition and reconstruction of track elements í improvement of the track finding and reconstruction efficiency at small polar angles

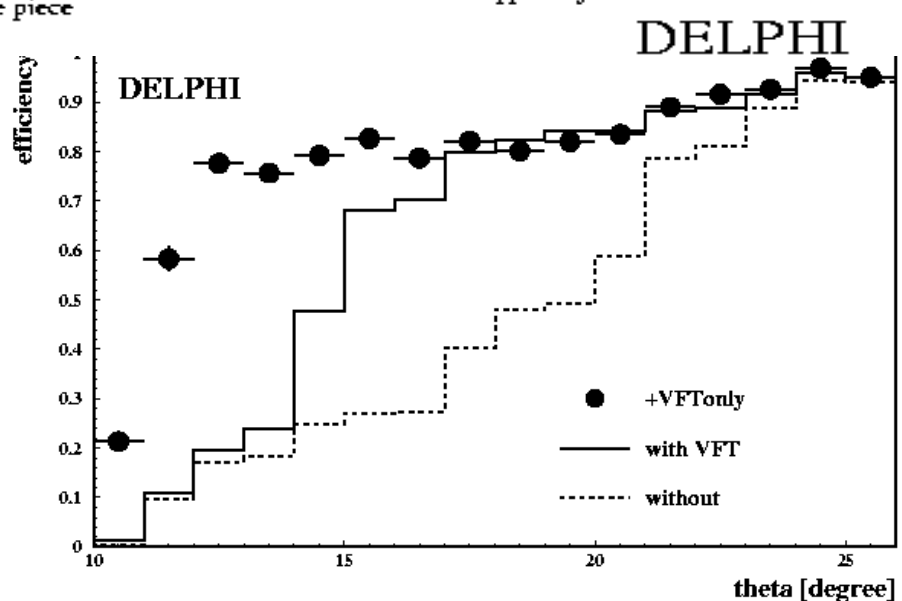

Silicon drift chambers in the CERES experiment

Heavy ions studies at the SPS in CERN

- **CERES — observation of an excess of low mass e+e- pairs in heavy ions collisions at SPS interpreted as a signature of the quark-gluon plasma (QGP).**

- Since 1994 the experiment has been equipped with two cylindrical Si drift chambers (upgraded almost every year) which provide the primary vertex reconstruction and the background rejection of conversions and close Dalitz pairs (U.Faschingbauer et al.., CERN-PPE/95-132)

- Design features: 360 n+ implanted charge collecting anodes on the outer periphery of a 3" wafer, intrinsic voltage deviders p+ implanted on each side of the wafer, and the collection of surface leakage currents in sink anodes.

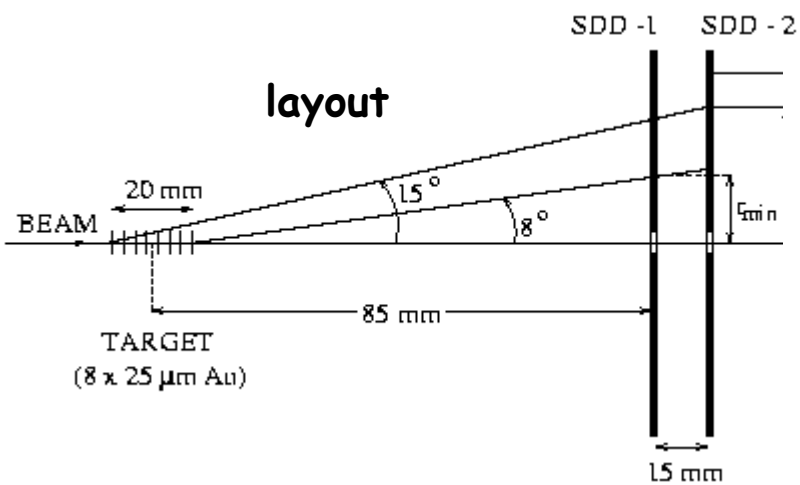

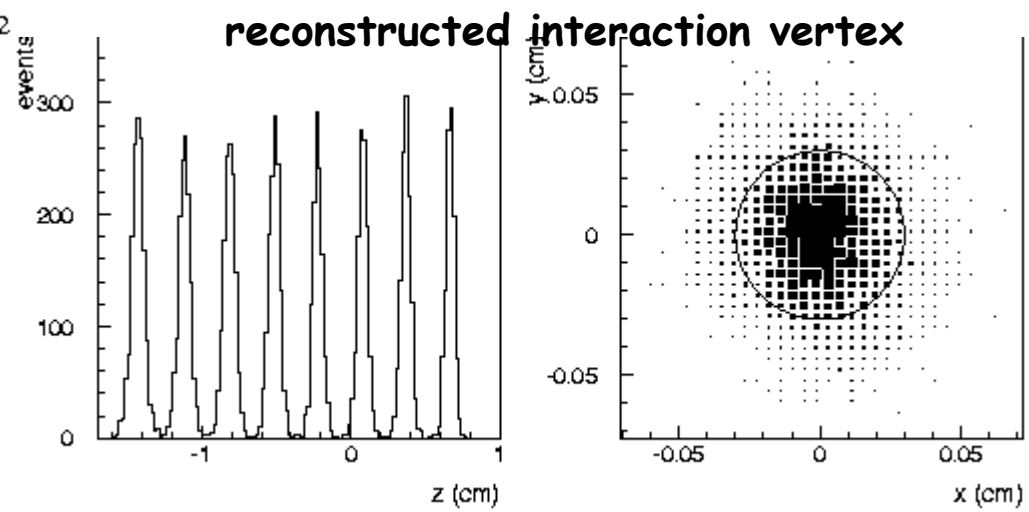

Silicon for frontier physics from the last decade

- Studies of b hadrons in LEP experiments, SLD and CLEO
- Higgs searches at LEP2
- t quark discovery - studies at the CDF experiment at Fermilab
- Studies of CP violation in B meson decays at the B factories
- Search for QGP in heavy ions experiments
- Search for neutrino oscillations in the NOMAD experiment
- ep interactions at HERA

Studies of b hadrons in LEP, SLD and CLEO

- Abundant production of b and anti-b quarks in Z^0 decays (LEP1, SLC) and of B mesons in γ_{4s} decays (CLEO)

- A big improvement of the b hadrons lifetime measurements already after one year of data taking by the LEP experiments

Figure from:
W.Trischuk, in the Proceedings of the 4th Int. Symposium on Heavy Flavour Physics, Orsay, June 1991

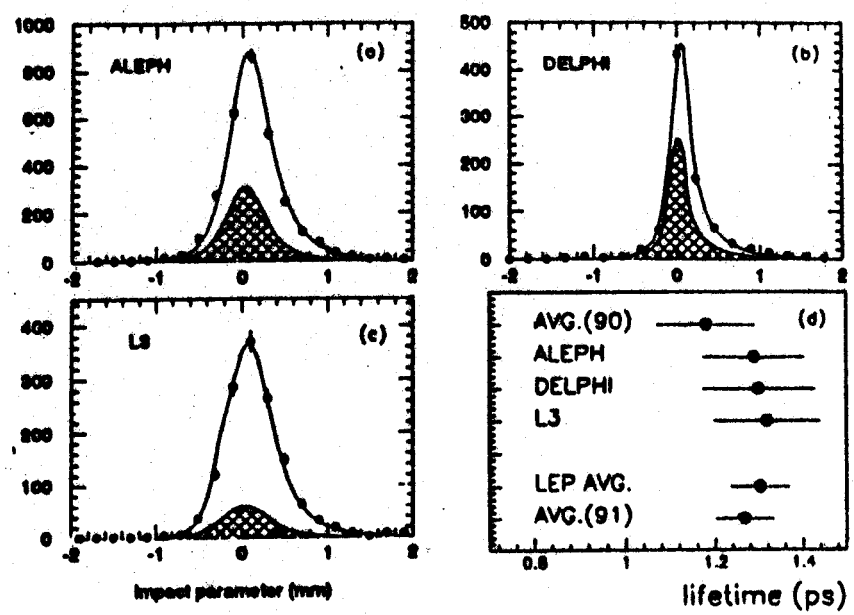

- Measurements based on 1990 data collected in a single LEP experiment were of a precision comparable with the previous world average

- A comparison of the DELPHI measurement (the only one using data from the Silicon vertex detector) with the ALEPH and the L3 measurements illustrates the importance of a good vertex detector

Studies of b hadrons in LEP, SLD and CLEO

b-tagging

x A variety of studies of b hadrons during the last 10 years: lifetimes of individual hadrons, spectroscopy of B mesons and baryons, semileptonic and rare decays, determination of the CKM matrix elements for B decays, B mesons oscillations, ...

x Essential role plays good b-tagging Ð determination of the probability that a given event topology is consistent with only one vertex. The probability is close to one for events having only the interaction vertex and is close to zero for events with the displaced decay verteces

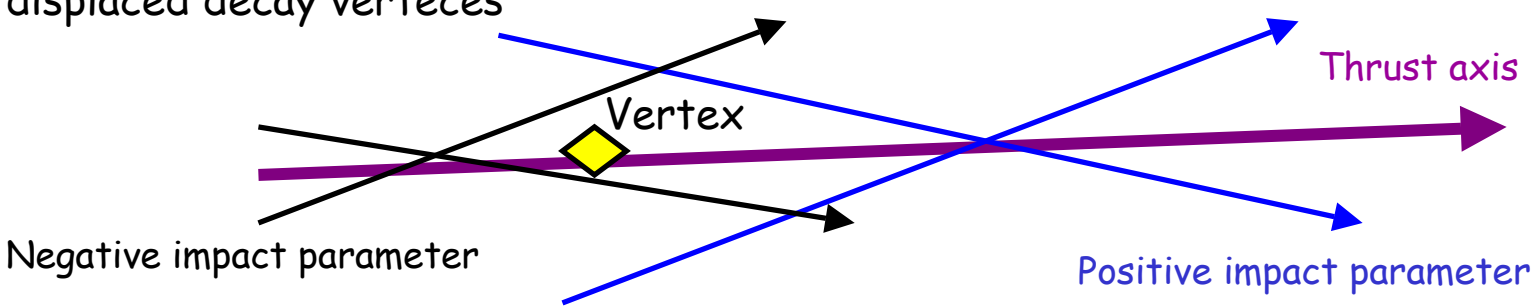

— the negative impact parameter distribution is used to estimate the resolution
— the probability that all tracks are coming from the primary vertex is computed
— the search for secondary vertices is performed with tracks incompatible with the primary vertex and the invariant mass of the secondary vertex tracks is used to discriminate between b and c decay vertices

b-tagging - vertex detectors at LEP and SLC

Figure from: M..Elsing, NIM A447 (2000) 76

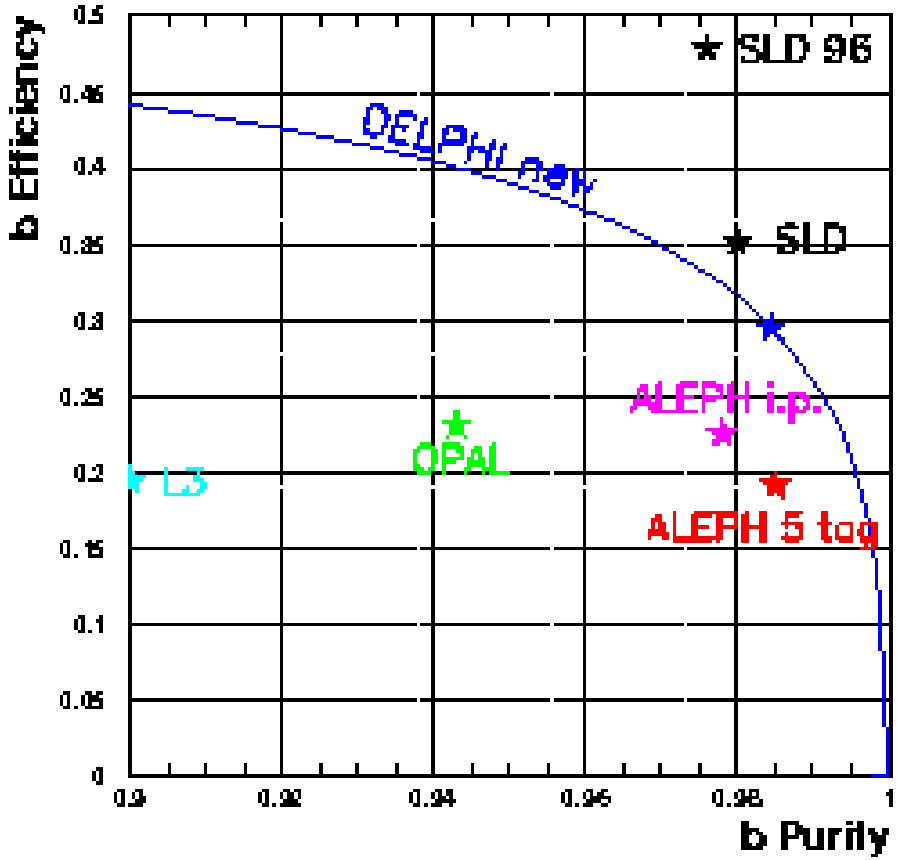

- SLD96 vertex detector much better than the LEP detectors due to a narrower beam pipe, a very good spatial resolution of the detector and a small multiple scatering term
- even the c-quark tagging was possible with this detector

Higgs searches at LEP2

The ALEPH candidate for the Higgs production in the reaction e+e-→HZ

from D.Schlatter talk at the special LEP seminar at CERN on September the 5th

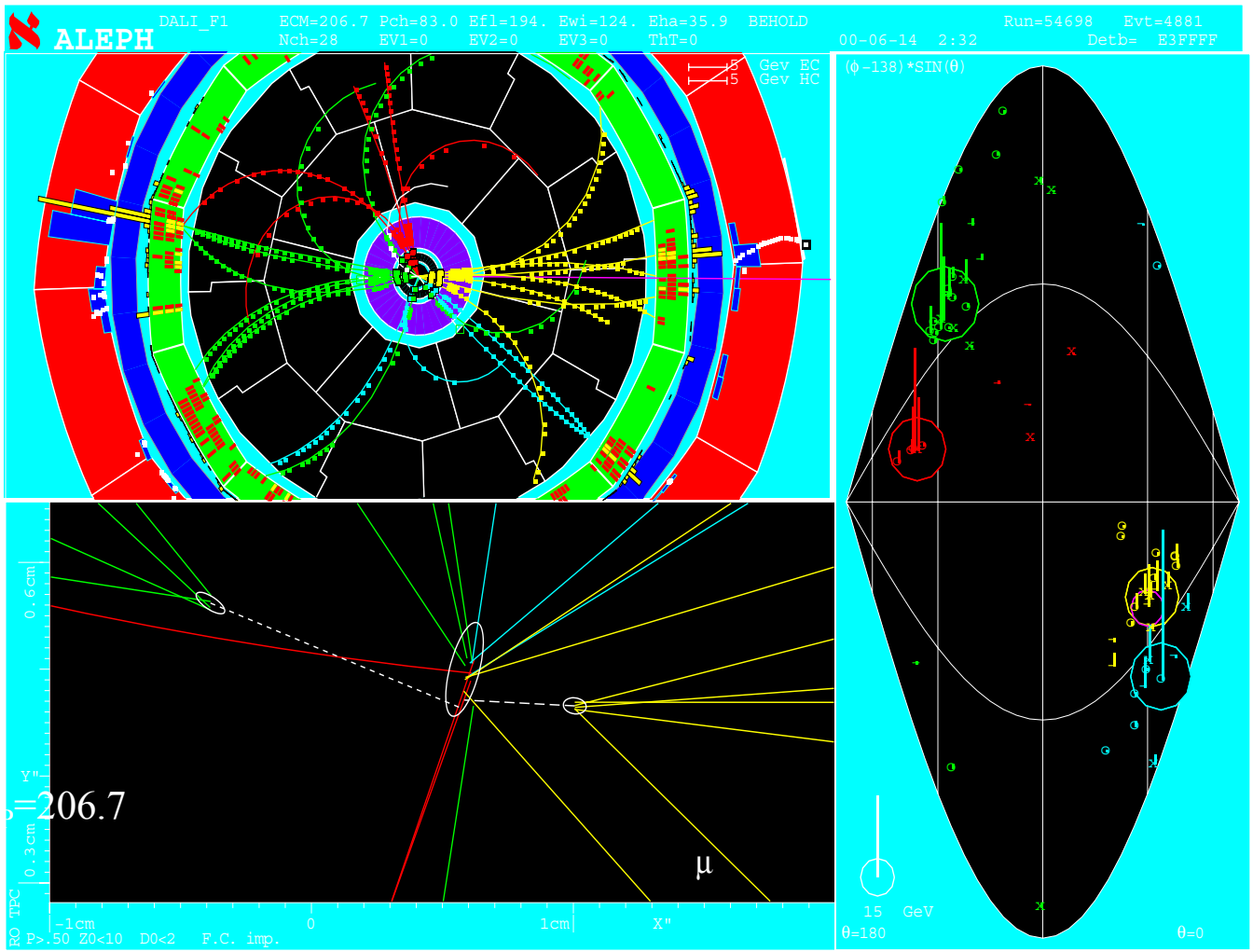

2 b cand.

HZ hyp.

m_H=114 GeV ±3 GeV

NN = 0.996

jet	**b-tag:**
Z	
1	**0.14**
2	**0.01**
H	
3	**0.99**

kin. mass fit

m_H=112.4GeV

m_Z=93.3GeV

ZZ hyp.

m_Z=102 GeV

m_Z=91.7GeV

Discovery of the t quark at Tevatron

The first evidence in April 1994

The significant signal (4.8σ effect in CDF) in February 1995

FERMILAB-Pub-95/022-E

The CDF measurement much improved due to the Silicon vertex detector measurements of b particles displaced vertices,
(inaccessible for D0)

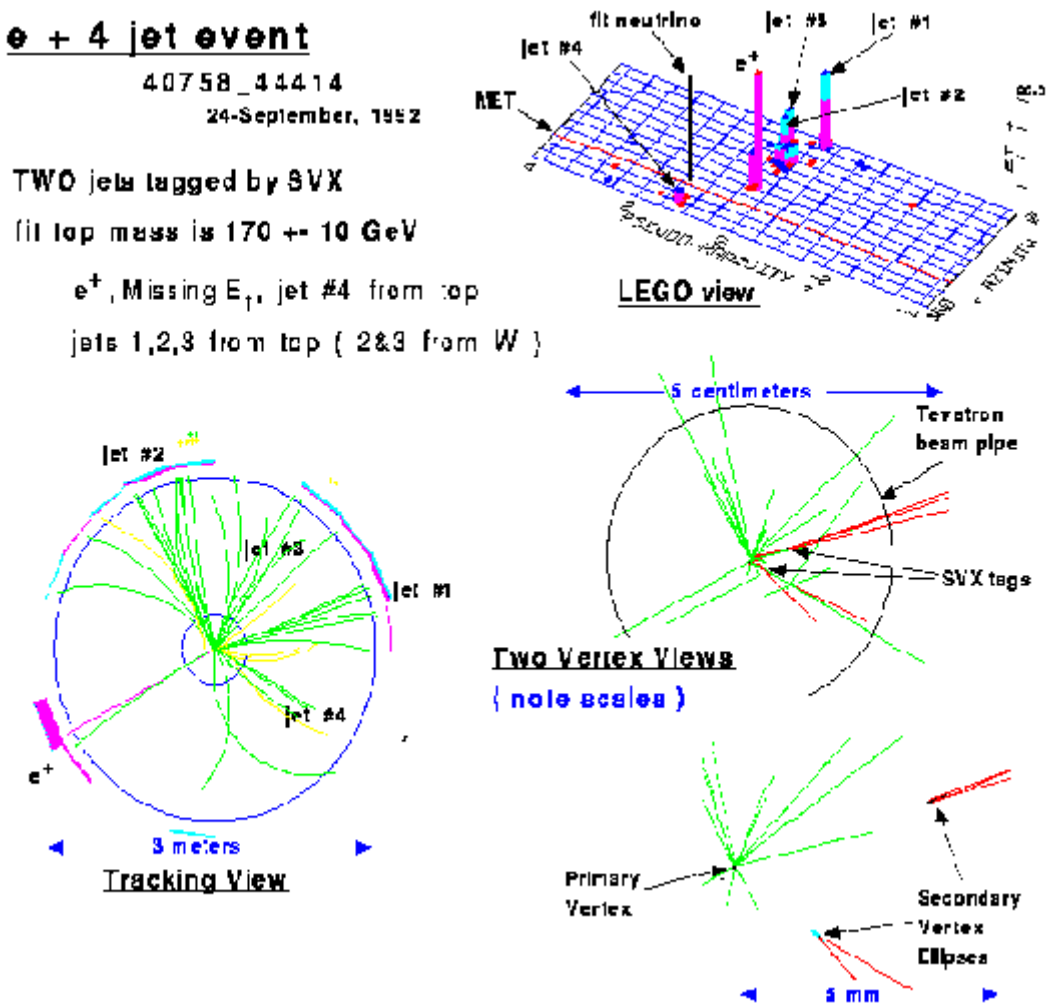

Silicon vertex detectors of the CDF experiment

S.Seidel, FERMILAB-Conf-94/377-E

- The first Silicon vertex detector at the proton collider
- Two detectors during the Run I data taking (SVX and SVX'), the third one is being constructed for RUN II
- Specific feature of the CDF vertex detectors: very advanced front-end readout chips as compared to other vertex detector projects developed at the same time
- SVX detector: consisted of two 12-sided, electrically independent barrels and had an active length of 51 cm. Each barrel was made of 4 layers (at R = 20.05, 42.56, 56.87 and 78.66 mm) of single-sided DC-coupled silicon microstrip sensors (with a pitch 60 μm and 55 μm). The SVX had 46080 channels and was constructed from 0.7 m^2 of Si. Readout chips selected channels with values above threshold and only such signals were sent out to further electronics circuits.
- SVX' - installed in 1994, similar to SVX but in rad-hard technology and assembled from AC-coupled single-sided microstrip detectors

Silicon vertex detectors of the CDF experiment

SVX II detector for Run II

Slides for SVX II are from the talk of Alan Sill at the Vertex 2000 conference

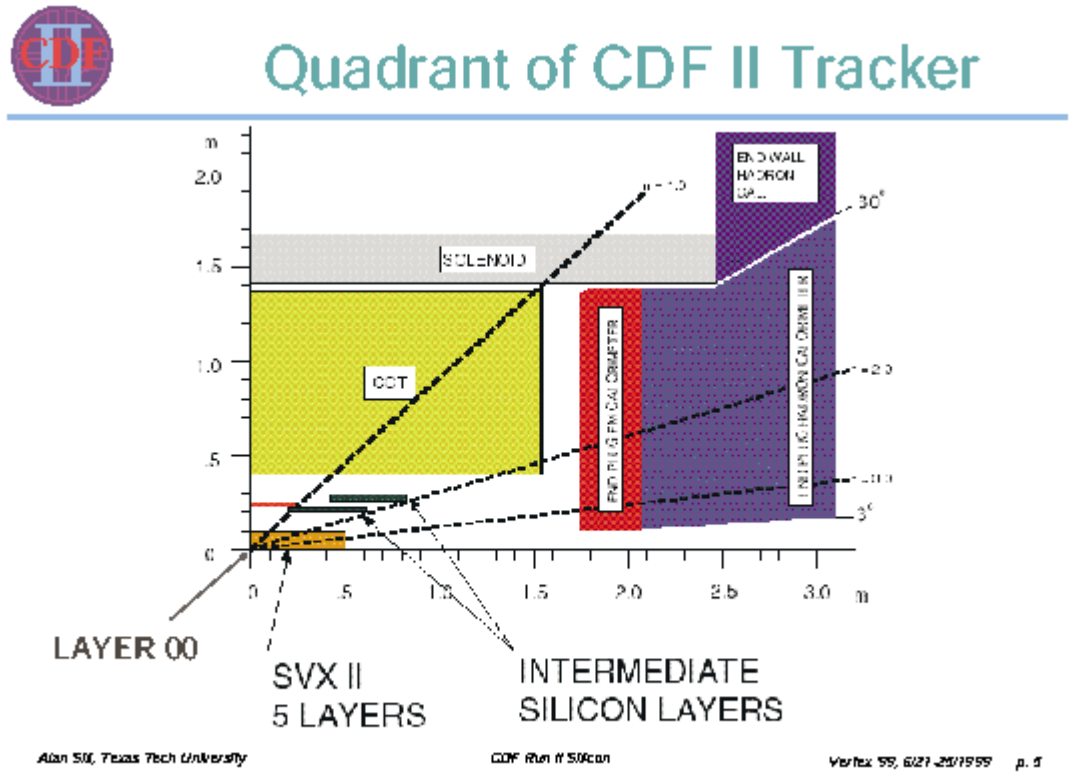

Ú The really ambitious upgrade: SVX II being a part of the Silicon tracking system giving a stand-alone tracking, coverage in pseudorapidity almost doubled, dead-timeless fast readout coping with the bunch spacing of 132 ns, the most advanced front-end chip, the online track reconstruction and search for displaced verteces used by trigger

Silicon vertex detectors of the CDF experiment

SVX II detector for Run II

SVX II: 3 Barrels, 5 Layers

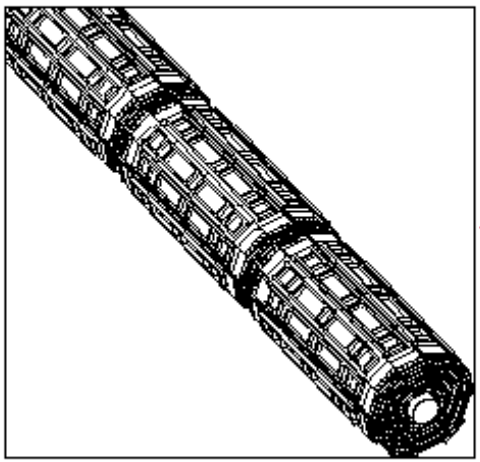

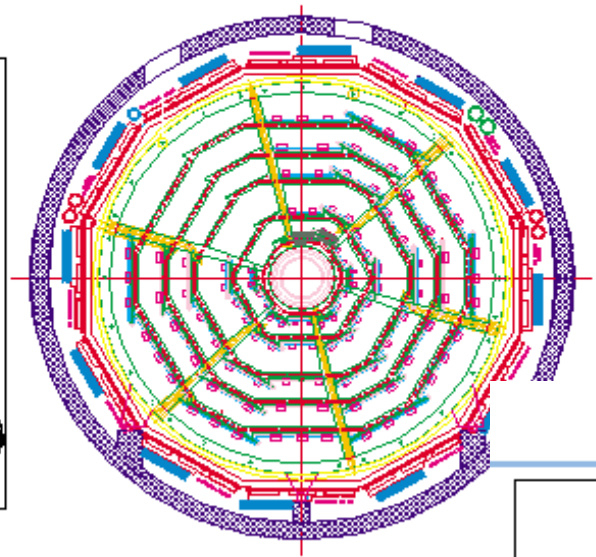

Alan Sill, Texas Tech University CDF Run II Silicon Vertex '99, 6/21-25/99

The readout chip: dynamic pedestal subtraction, digitisation, sparsification, continuous analog data aquisition during digitisation and readout, radiation hardness up to 4 MRad

SVX3D R/O Chip

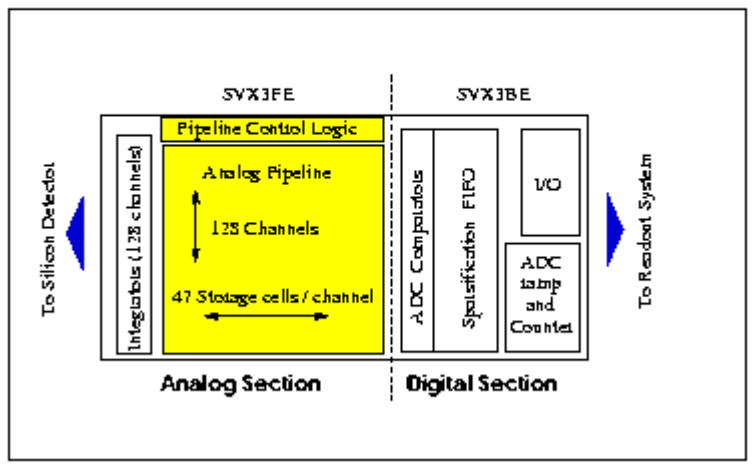

5 layers at R = 2.45, 4.67, 7.02, 8.72, 10.6 cm, all detectors are double-sided, the total number of readout channels is 405504

Comparison of the Silicon tracking systems of CDF and D0

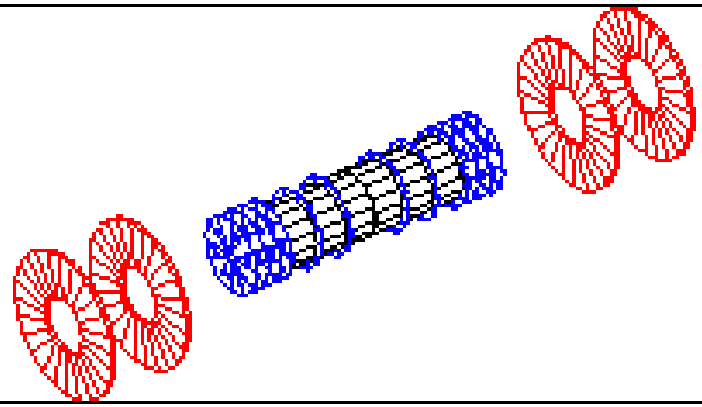

DØ	6 Barrels	F Disks	H Disks	Totals
Layers/planes	4	12	4	
Δ_z	77 cm	48 cm	10 cm	
Channels	387120	258000	147456	792576
Modules	432	144	192	768
Readout Length	12 cm	7.5 cm	14.9 cm	
Inner Radius	2.7 cm	2.6 cm	9.5 cm	2.6 cm
Outer Radius	9.4 cm	10.5 cm	26 cm	26 cm

CDF	Layer 00	SVXII	ISL	Totals
Layers	1	5	2	8
Length	0.9 m	0.9 m	1.9 m	
Channels	13824	405504	303104	722432
Modules	48 SS	360 DS	296 DS	704
Readout Length	14.8 cm	14.5 cm	21.5 cm	
Inner Radius	1.35 cm	2.5 cm	20 cm	1.35 cm
Outer Radius	1.65 cm	10.6 cm	28 cm	28 cm
Power	~100 W	1.4 kW	1.0 kW	1.5 kW

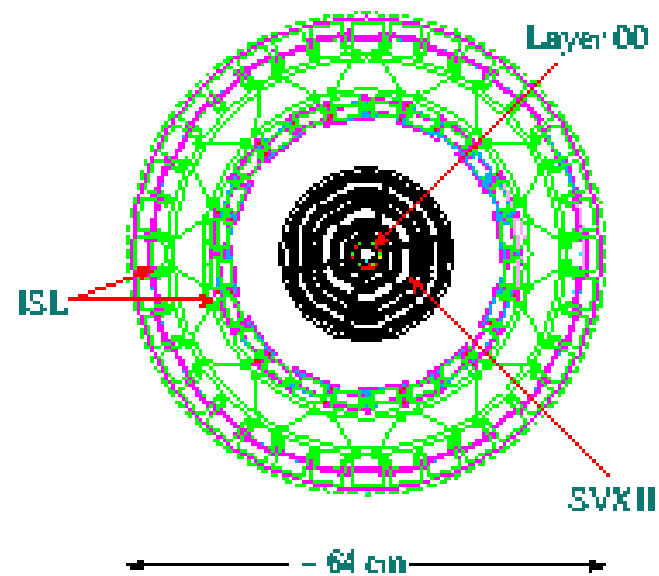

CP violation at B factories

BaBar experiment at SLAC and Belle experiment at KEK

Physics goal: Observation of time-dependent CP asymmetry in B decays into CP eigenstates

Specific features of B factories: different energies of the beams and almost continuous beams Ú vertex detectors must cope with it

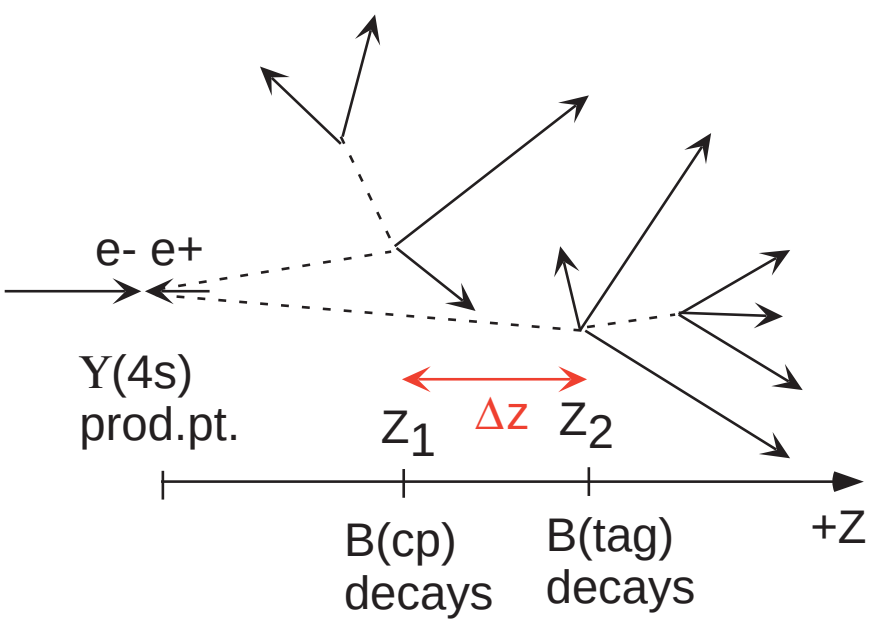

$$\Delta z = c\beta\gamma\Delta t$$

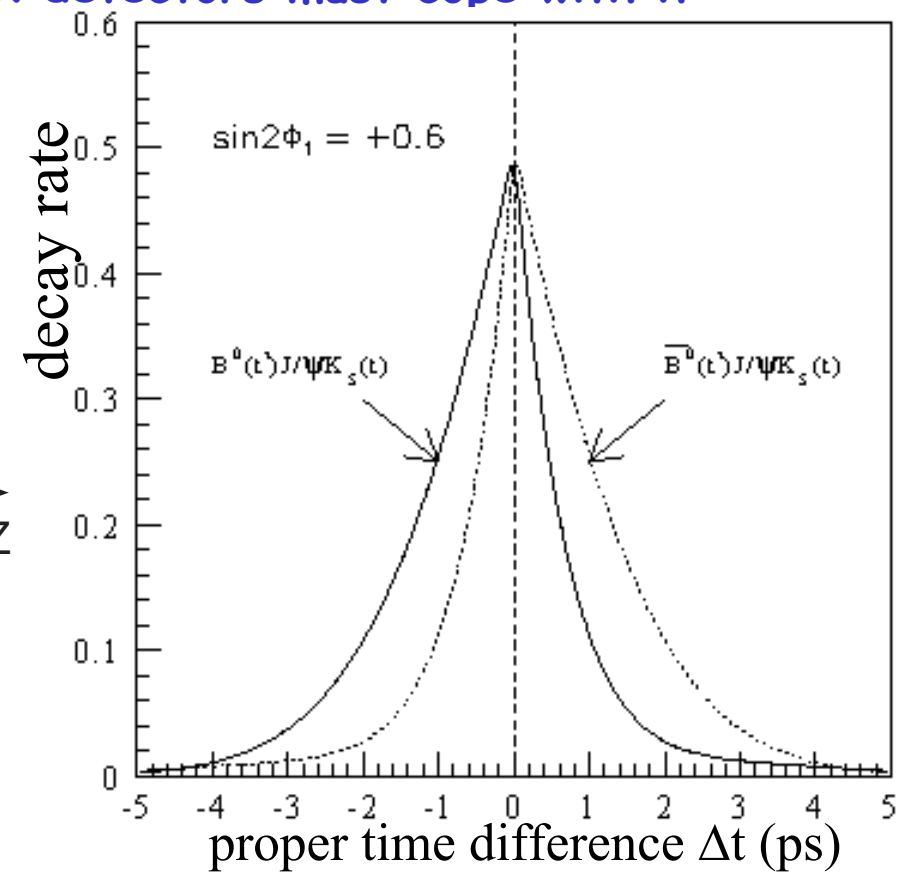

Figures from the talk of M..Hazumi at Vertex 2000

BaBar experiment at SLAC

from the talk of S.Bettarini at Vertex'99, published in NIM A447 (2000) 15

SVT Design Requirements:

- Δz resolution < 130 μm
- Single vertex resolution < 80 μm (error on Vtag > error on Vcp)
- Stand-alone tracking for low Pt particles (<100 MeV/c)

PEP-II constraints:

- Permanent (B1) dipole magnets restrict polar acceptance: $17.2^\circ < \theta < 150^\circ$
- Bunch crossing period: 4.2 ns (almost continuous interactions!)
- Radiation hardness (nominal bkg):
  - on average : 33 kRad / year
  - in the beam plane: 240 kRad/ year
  - det's and rad-hard readout IC required

SVT is designed to work up to 10 x nominal BKG for 10 years

The BaBar Silicon Vertex Tracker

- 5 Layers of double-sided, AC-coupled Silicon.
- Custom rad-hard readout IC (the AToM chip).
- Low-mass design. (Pt < 2.7 GeV/c^2 for B daughters)
- Stand-alone tracking for slow particles.
  - Inner 3 layers for angle and impact parameter measurement.
  - Outer 2 layers for pattern recognition and low Pt tracking.

Layer	Radius
1	3.3 cm
2	4.0 cm
3	5.9 cm
4	9.1 to 12.7 cm
5	11.4 to 14.6 cm

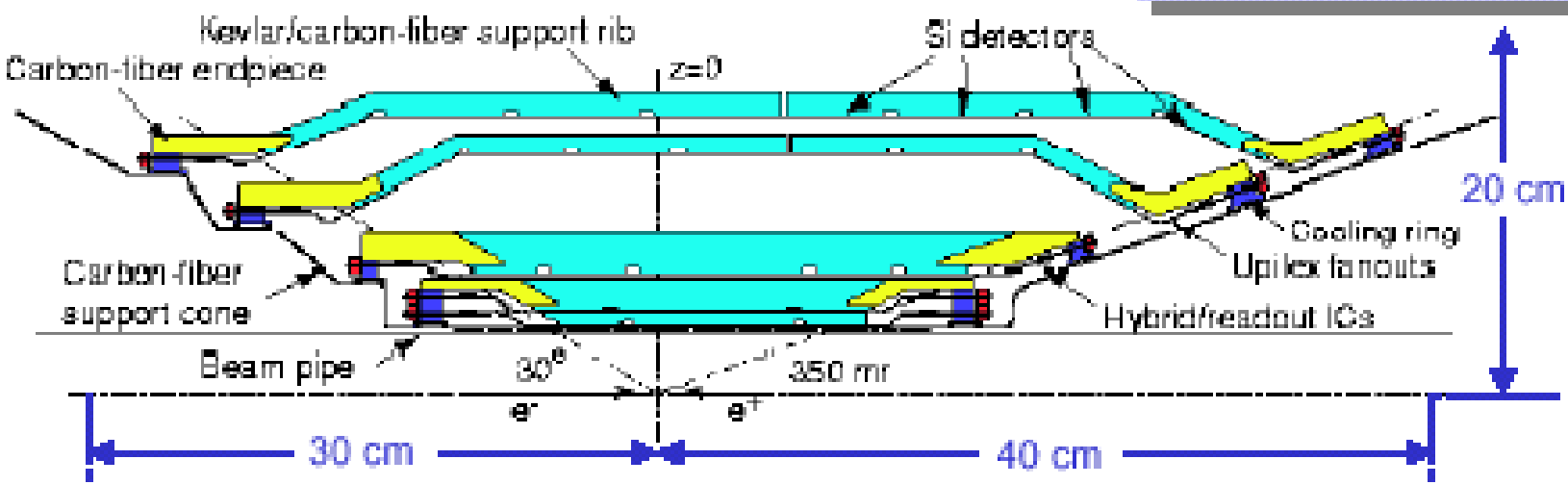

Pisa Meeting - Elba
May 2000

The BaBar Silicon Vertex Tracker

6

Belle experiment at KEK

this page comes from the talk of M.Hazumi at Vertex 2000

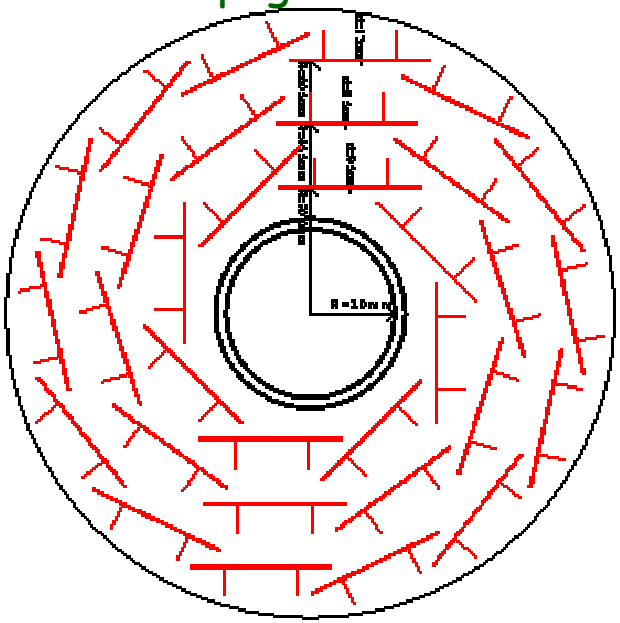

Detector Configuration

- **Be beampipe**
  - **r=20.0mm (inner surface)**
  - **double wall (500μm thick/each wall)**
  - **20μm gold foil as X-ray absorber**
- **Three layers of DSSD ladders (300μm thick)**

– 1st layer	r = 30.0 mm,	2 DSSDs in z,	8 ladders
– 2nd layer	45.5	3	10
– 3rd layer	60.5	4	14

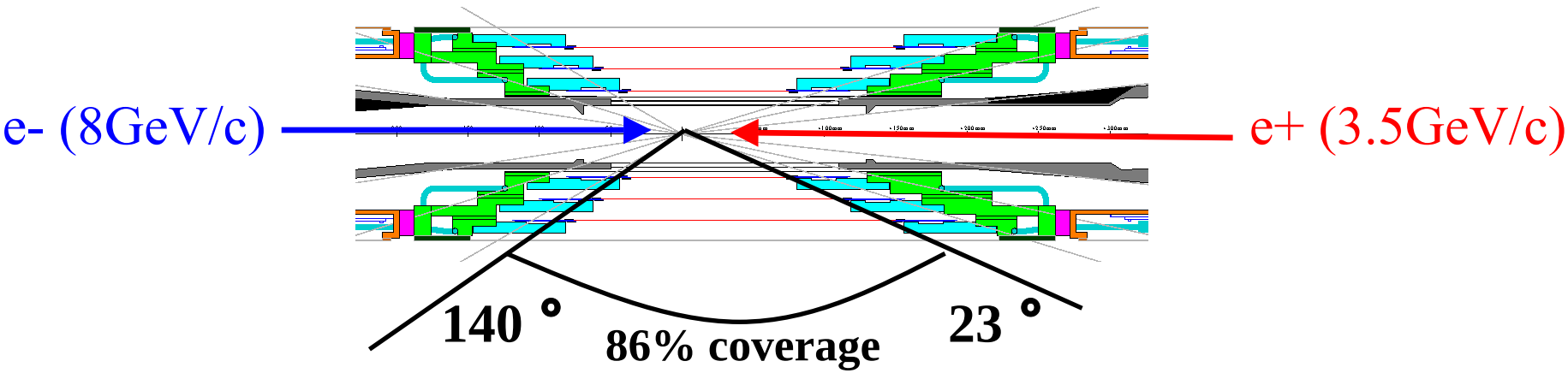

Belle experiment at KEK

from the talk of M.Hazumi at Vertex 2000

Impact Parameter Resolution in z

Real Data

$36 \oplus 42/p\beta\sin^{5/2}\theta$ [μm]

(Ideal) Monte Carlo

$28 \oplus 41/p\beta\sin^{5/2}\theta$ [μm]

Impact Parameter Resolution in Rφ

Real Data

$19 \oplus 50/p\beta\sin^{3/2}\theta$ [μm]

(Ideal) Monte Carlo

$15 \oplus 49/p\beta\sin^{3/2}\theta$ [μm]

Δz Resolution

$$\sigma(\Delta z) = 115^{+24}_{-26}\,\mu m$$

Search for QGP in heavy ions experiments

- Silicon detectors in different roles: as multiplicity detectors, vertex detectors and general trackers; dE/dx measurements used for particle identification at low momenta. Studies at two heavy ions accelarators: SPS at CERN and RHIC collider in Brookhaven (since this year)

- Specific requirements: Silicon detectors must deal with high occupancy, high rates and high radiation

NA50 at SPS

— **Discovery of the J/ψ suppression in Pb-Pb interactions (interpreted as a signature of QGP)**

— Since 1996 the experiment has been equipped with a Silicon detector to measure multiplicity and angular distribution of secondary particles (B.Alessandro et al., NIM A409 (1998) 167)

— The Si detector consists of two disks (inner radius = 0.5cm, outer radius = 8.5cm) of radial microstrip silicon detectors with a constant segmentation $\Delta\eta$ = 0.02 in pseudorapidity and $\Delta\phi = 10^0$ in azimuthal angle

— The complete system has 13824 channels and operates at 50 MHz sampling frequency to deal with very high rate of the experiment

WA97/NA57 experiments at SPS

- **Observation of the strangeness enhancement in Pb-Pb collisions, interpreted as a signature of QGP**
- Equipped with the pixel and microstrip Silicon detectors providing a full tracking (further tracking detectors were used only to improve the momentum resolution) (F.Antinori et al., Strangeness '95, Tucson, January 95)

WA97 setup: 7 pixel planes with 75 x 500 μm^2 pixel size and 10 microstrip planes with a 50 μm. pitch

NA57 setup: additional Silicon detectors to cover a larger centrality range, with a new pixel chip 50 x 500 μm^2

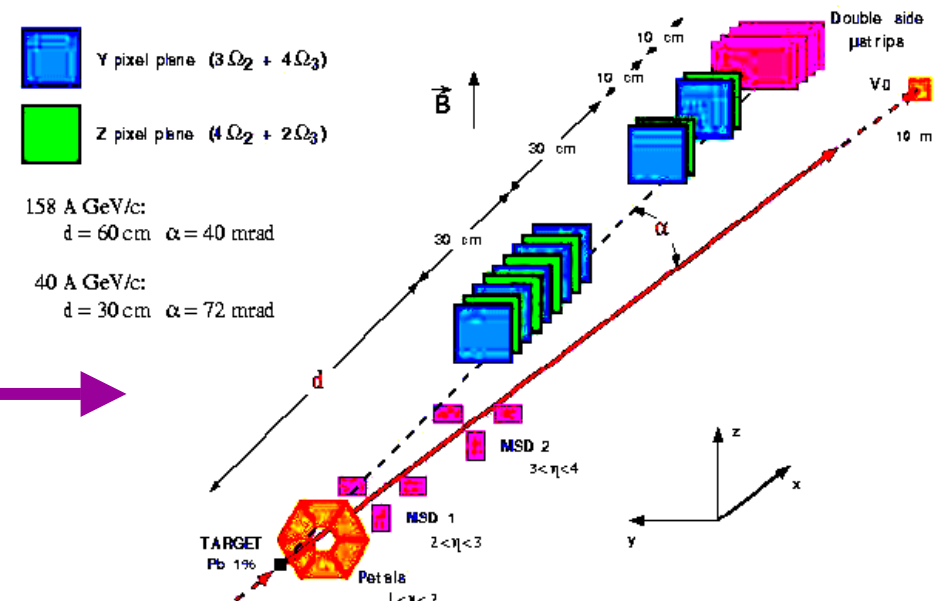

Photo of the electronics of a pixel cell (Omega 3)

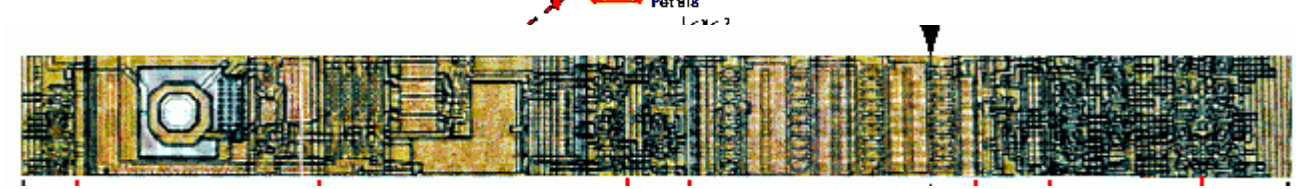

STAR experiment at RHIC

Based on the talk of Jun Takahashi at the 8th Pisa Meeting, Elba 2000

x Search for signatures of QGP in heavy ions collisions at unprecedented energies and with a variety of the colliding beams (up to 100 GeV/beam and up to Au ions).

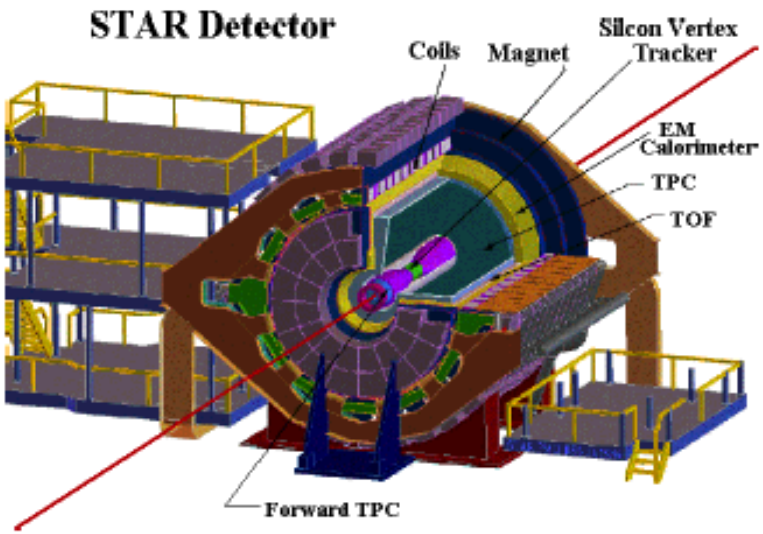

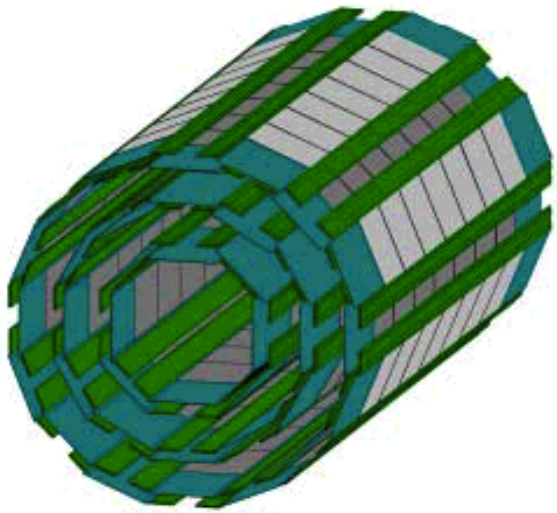

x The STAR vertex detector is being constructed — it will start to take data in 2001.

x It will contain 216 Silicon drift chambers in 36 detector ladders, mounted in 3 concentric barrels at radii 6.6 cm, 10.6 cm and 14.5 cm and will have a total Silicon surface of 0.7 m^2

STAR experiment at RHIC

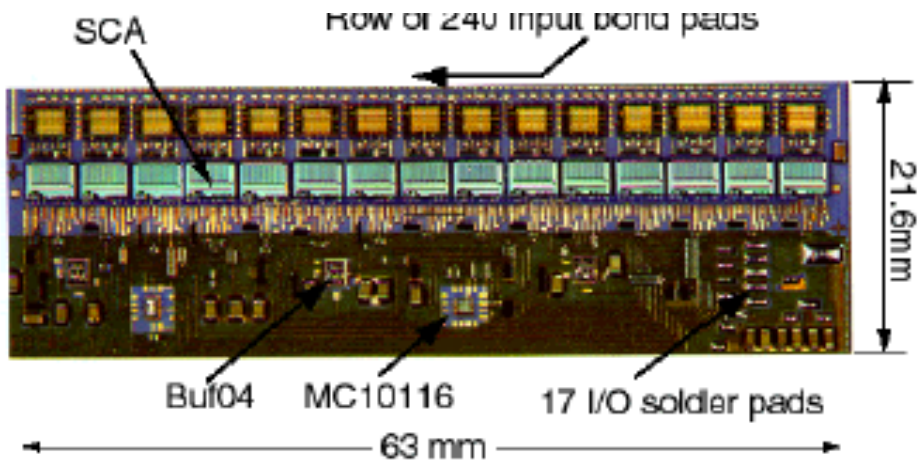

x **Drift detectors**: 6.3 x 6.3 cm2 , 95% active area, 300 μm thick, 2 x 240 readout anodes (spacing of 250 μm), 128 time buckets of 40 ns

x **Readout time**: 4 μs drift time, 5 ms readout of all SVT wafers

x **Detector performance**: drift velocity: ~6 μm/ns, single hit resolution: 10 μm in anode direction, 20 μm in drift direction, double hit resolution: 400 μm, noise 530 elrctrond, no charge loss observed

PHOBOS experiment at RHIC

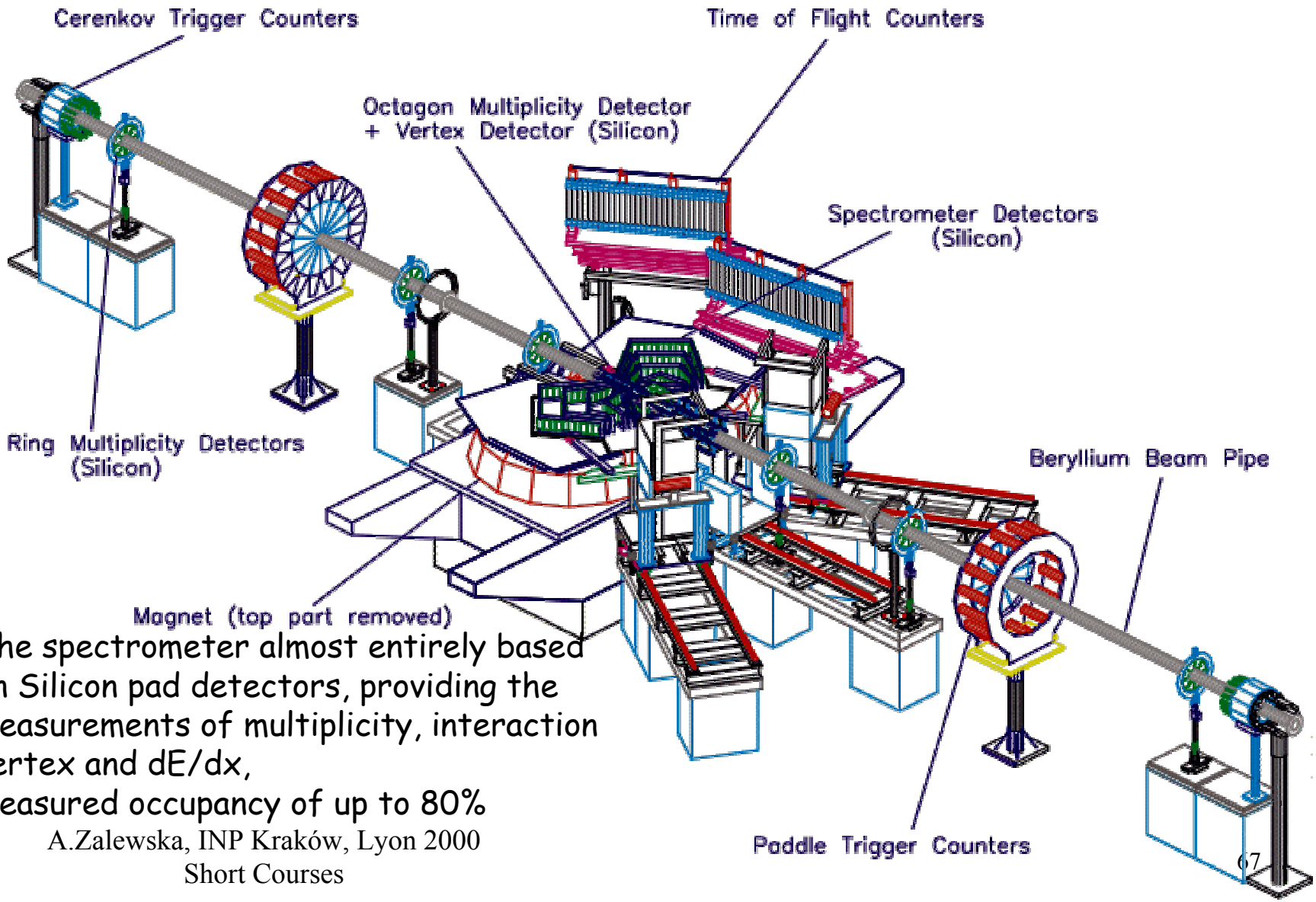

The spectrometer almost entirely based on Silicon pad detectors, providing the measurements of multiplicity, interaction vertex and dE/dx,
measured occupancy of up to 80%

Search for neutrino oscillations in the NOMAD experiment at CERN

The experiment was searching for the $\nu_\mu \rightarrow \nu_\tau$ oscillations via the observations of the τ lepton decays, hence its instrumented target with Silicon strip detectors

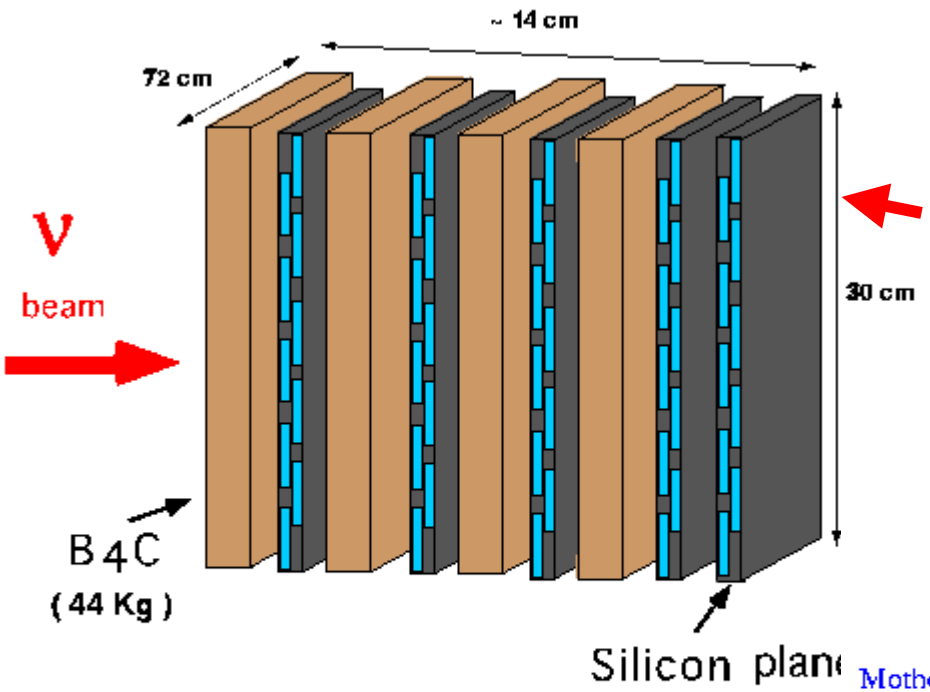

EACH SILICON PLANE

10 ladders
of 12 detectors each
6400 readout channels

Figures from the A.Cervera-Villanueva talk at VERTEX'99, published in NIM A447 (2000) 100

the instrumented target of NOMAD

the Silicon plane equipped with 10 ladders

12 detectors/ladder - the longest ladder ever built - intrinsic resolution = 4 μm.

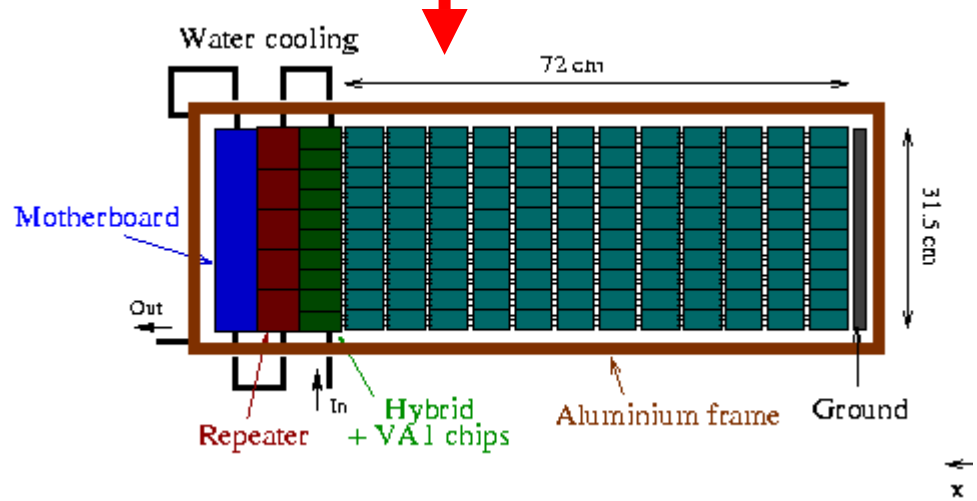

Vertex detectors at HERA

H1: D.Pitzl et al., ETHZ-IPP-P-2000-01, ZEUS: A.Garfagnini, talk at the 8th Pisa meeting, Elba 2000.

- All four experiments at HERA have or will soon have Silicon vertex detectors. The detectors are designed for studies of the charm and beauty production and to provide general tracking improvement. They must cope with high rates.

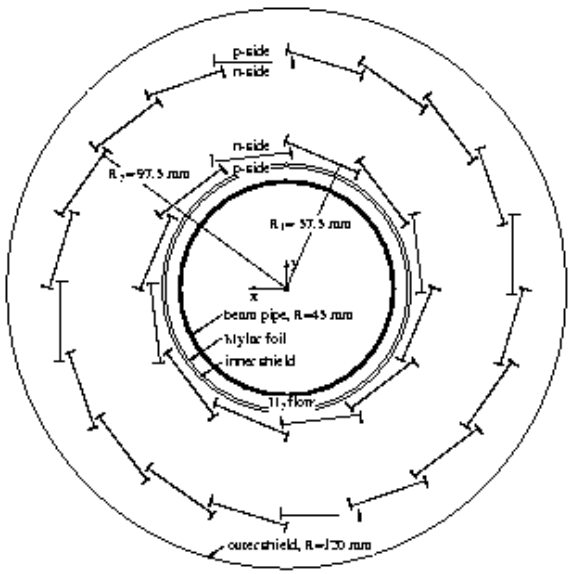

H1

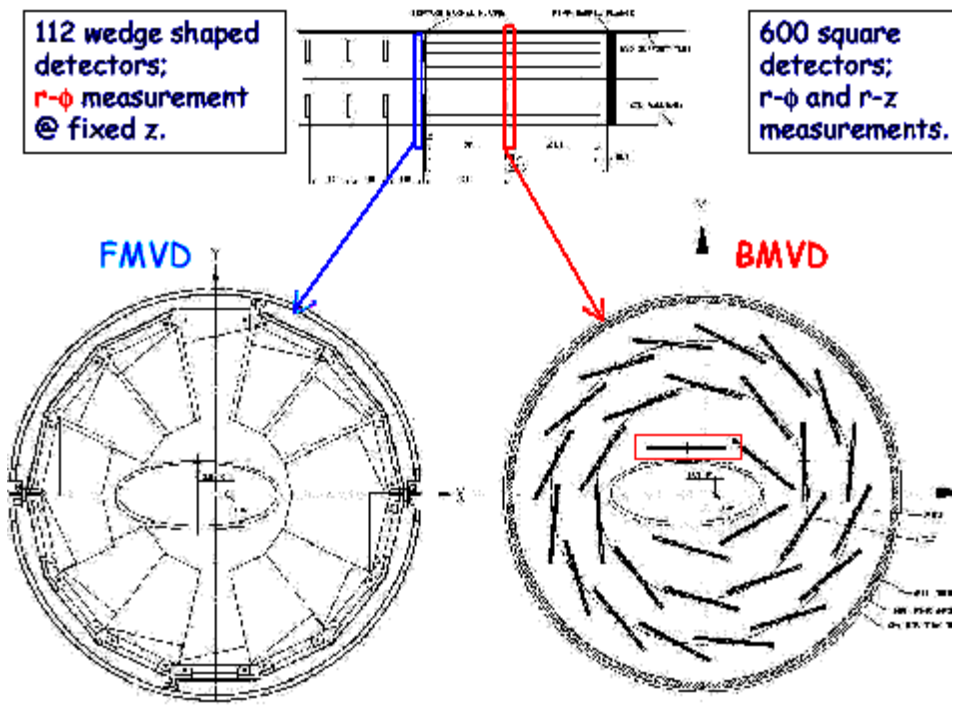

ZEUS

Vertex detectors at HERA

HERA-B: S.Masciocchi: talk at the 8th Pisa Meeting, Elba 2000
ZEUS:Els Kofeman: talk at the Vertex 2000

Interesting features:

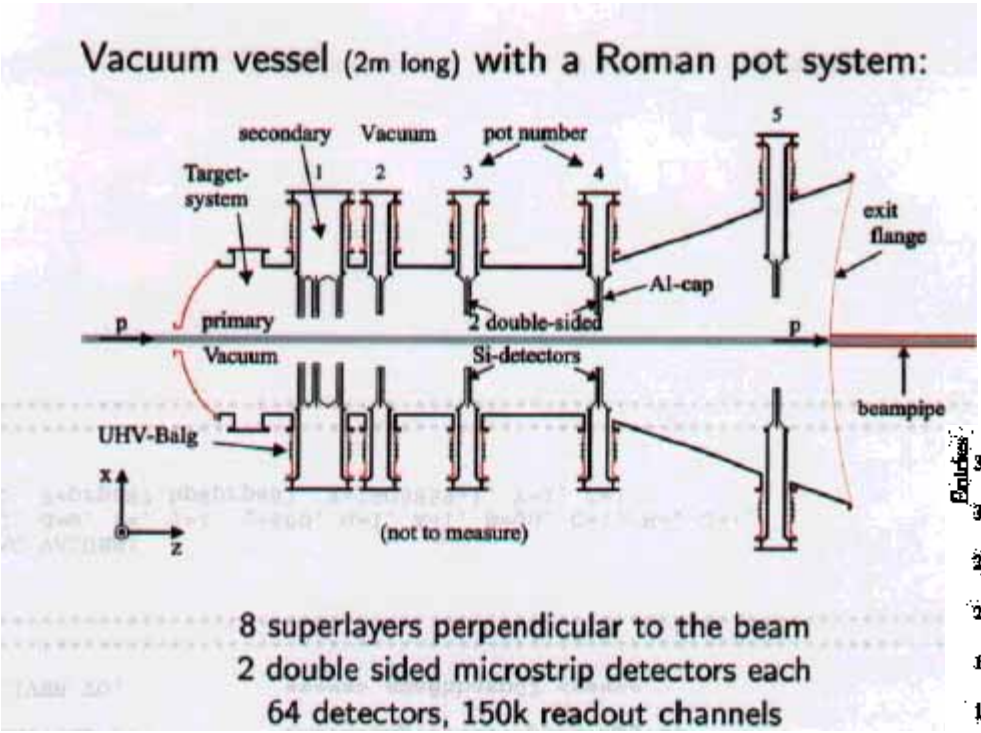

HERA-B: detectors in movable roman pots

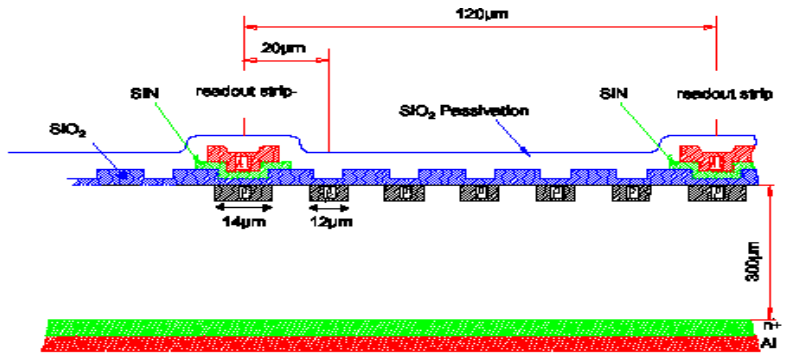

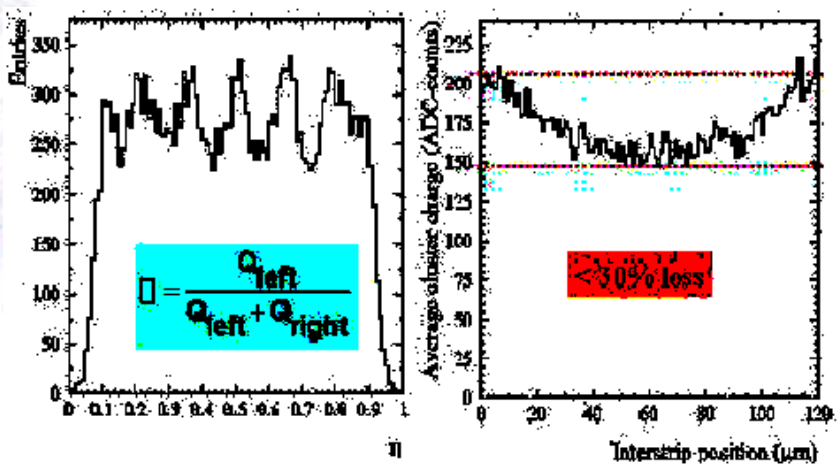

ZEUS: detectors with five floating strips

Future projects

- General trends
- Silicon detectors for the LHC experiments
- Big Silicon detecting systems in cosmic space
- New development - CMOS sensors for the vertex detector at future e^+e^- linear colliders

General trends for the first decade of the 21st century

- Availability of bigger wafers — 8" wafers soon (2" wafers 20 years ago)
- Two-dimensional silicon detectors (APS pixels, drift chambers) are used in the currently constructed vertex detectors — with a total silicon surface similar to a surface of the actual biggest strip vertex detectors
- New developments like CMOS sensors (or SOI monolithic detectors) may appear the best choice for vertex detectors at the future linear collider
- In ATLAS and CMS full tracking will be performed with tens of squared meters of silicon strip detectors
- A continuously increasing role of VLSI chips close to the detector — they will take over many functions of the electronics boards which nowadays are placed in racks and will have a very high rate capability
- An increasing sophistication of triggers based on Silicon detectors
- **In the near future Silicon detectors will play a similar role in astrophysics experiments and in medicine as they play nowadays in HEP experiments**

Trends — an increasing total surface of the detectors and of the number of readout channels

From: C J S Dammerell: Vertex Detectors: The State of the Art and Future Prospects, RAL-P-95-008

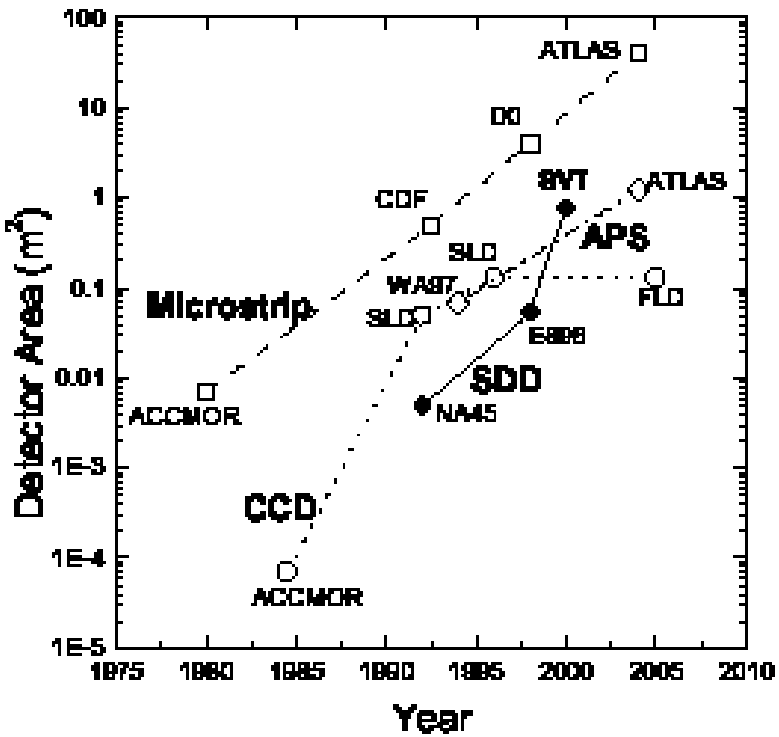

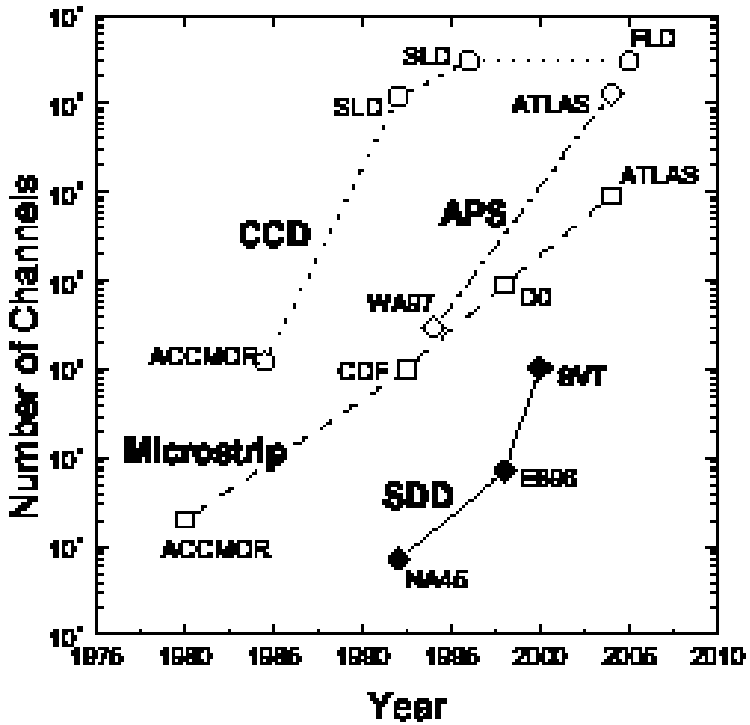

* the surfaces of the pixel and strip detectors for ATLAS will be bigger than shown in the figure

Silicon detectors in LHC experiments

Example 1: 2m^2 of pixel detectors in ATLAS

The ATLAS Pixel Detector

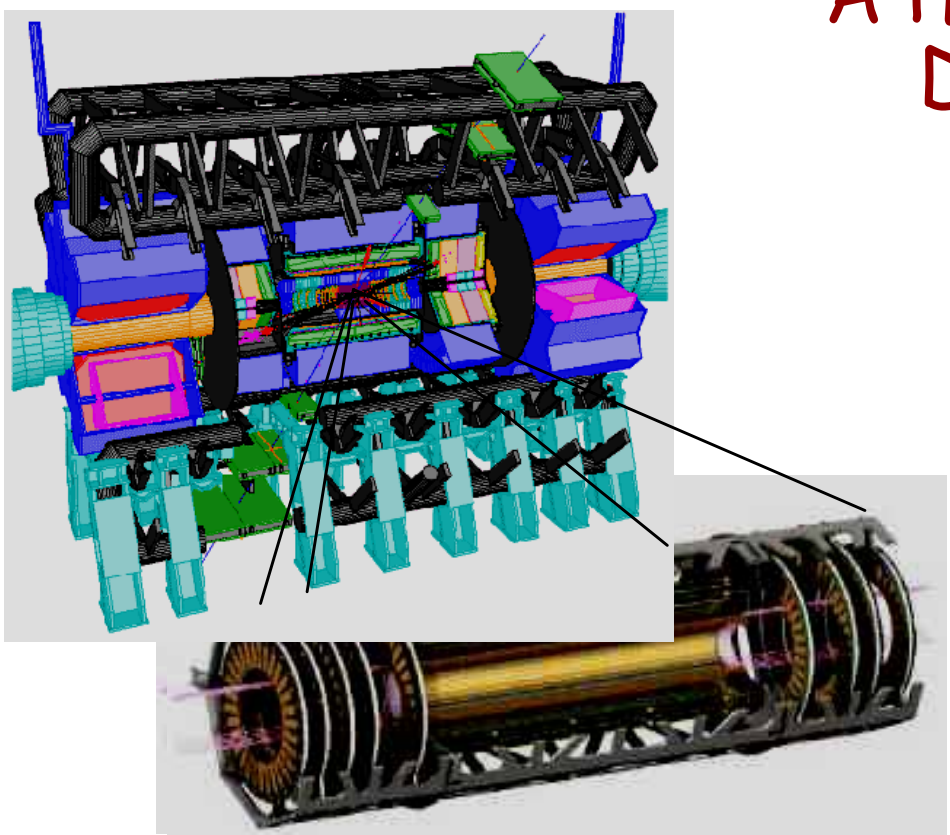

ATLAS Pixel Detector

- It is the vertex tracker of the ATLAS experiment.
- It consists of
  - 2x5 disks
  - 3 barrel layers
  - 50 μm × 400 μm silicon pixels
- for a total of 10^8 channels and 2 m^2 of Silicon.

Attilio Andreazza 3/20 La Biodola 23 May 2000

Silicon detectors in LHC experiments

Example 2: ???? m^2 of strip detectors in CMS

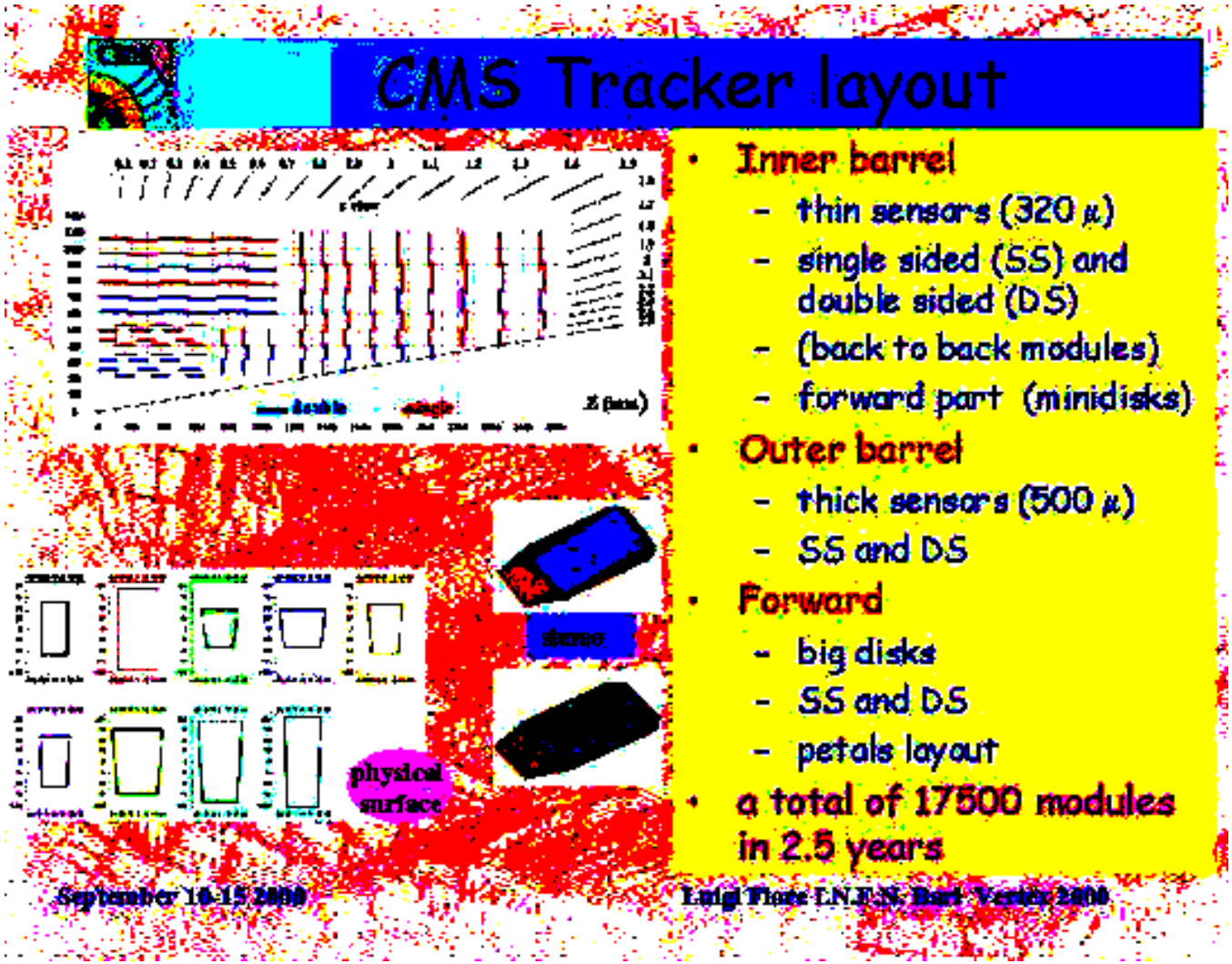

Silicon detectors in LHC experiments

Example 3: The ALICE Silicon tracker

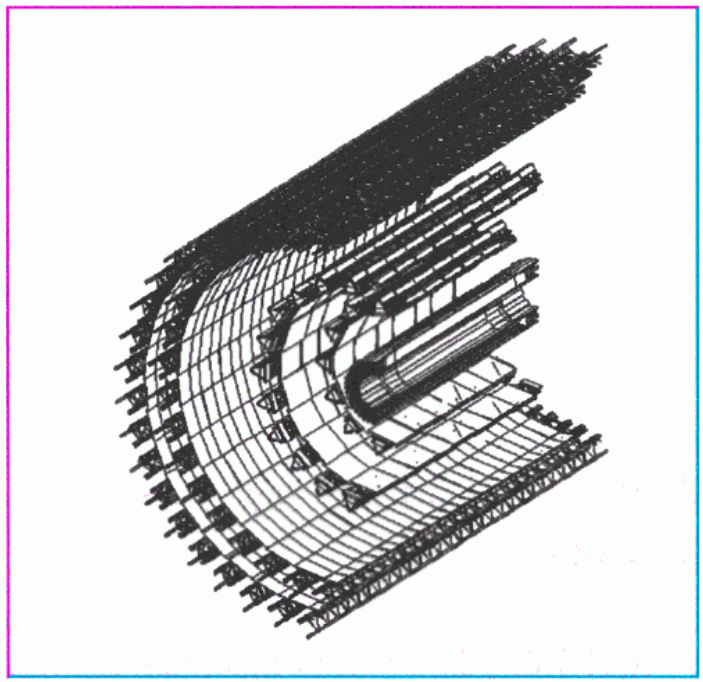

Layer	Type	r (mm)	area (m^2)	channels	rϕ res (μm)	z res (μm)
1	Pixel	40	0.09	5 242 880	12	
2	Pixel	70	0.18	10 485 760	12	
3	Drift	149	0.37	43 008	38	
4	Drift	238	0.89	90 112	38	
5	Strip	391	2.28	1 201 152	20	830
6	Strip	436	2.88	1 517 568	20	830

Slides from the P.Kuijer talk at VERTEX'99, published in NIM A447 (2000) 251

Microcables instead of wire bonding

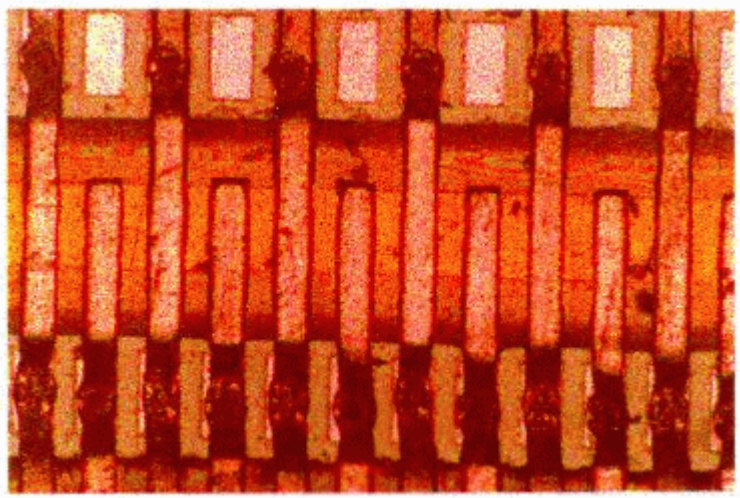

Silicon detectors in astrophysics experiments

from: F.Liello, presentation of the GLAST experiment at the 8th Pisa workshop, Elba, May 2000

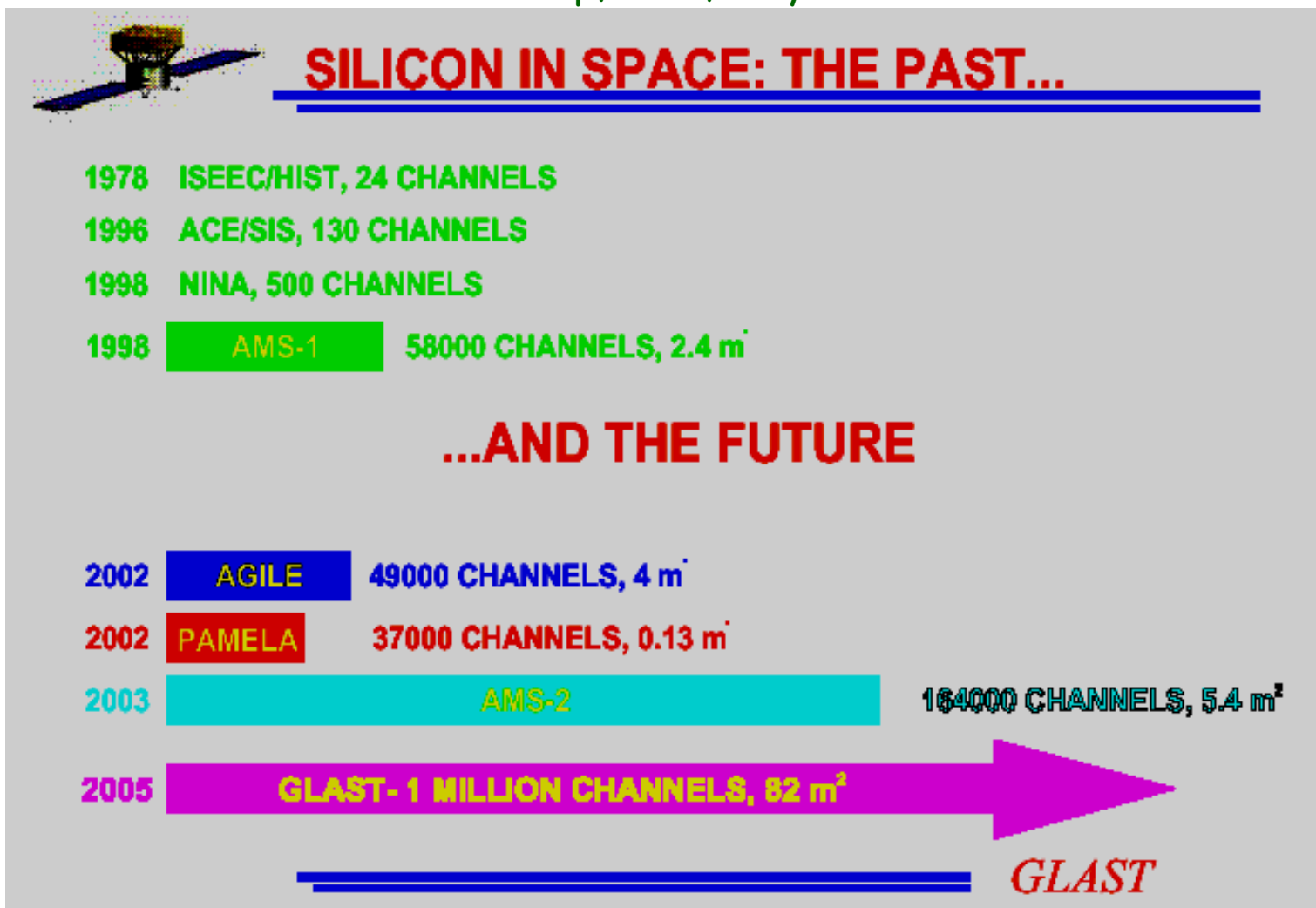

Silicon detectors in astrophysics experiments

Future studies concern the fundamental problems:

AMS (the Alpha Magnetic Spectrometer)

- Search for Antimatter in space with a sensitivity of 10^3 to 10^4 better than current limits
- Search for dark matter by high statistics precision measurements of $e^{\pm}$, photon and proton, antiproton spectra
- Astrophysical studies of the cosmic rays origin by high statistics precision measurements of D, ^{3}He, ^{4}He, B, C, ^{9}Be, ^{10}Be spectra

GLAST (Gamma-ray Large Area Space Telescope)

- Search for blazars, gamma-ray bursts and dark matter, studies of pulsars and diffuse gamma radiation by precise measurements of gamma rays in an energy range 20 MeV — 300 GeV

Special requirements for Silicon detectors in space:
the detector structure must be rigid to survive the start up and the landing of the station, hence duplications of the connections etc.

Silicon detectors in astrophysics experiments

from: F.Liello, presentation of the GLAST experiment at the 8th Pisa workshop, Elba 2000

Tracker Structure

- 16 towers, each with 37 cm × 37 cm of Si
- 18 *x,y* planes per tower
  - 19 "tray" structures
    - 12 with 2.5% X_0 Pb on bottom
    - 4 with 25% X_0 Pb on bottom
    - 2 with no converter
  - Every other tray rotated by 90°, so each Pb foil is followed immediately by an *x,y* plane
    - 2mm gap between *x* and *y*
- Electronics on the sides of trays
  - Minimize gap between towers
  - 9 readout modules on each of 4 sides
- Trays stack and align at their corners
- The bottom tray has a flange to mount on the grid
- Carbon-fiber walls provide stiffness and the thermal pathway to the grid

One Tracker Tower Module

– **Si/Pb muli-layer active converter**

CMOS sensors for tracking particles

From W.Dulinski
(LEPSI, Srasbourg)

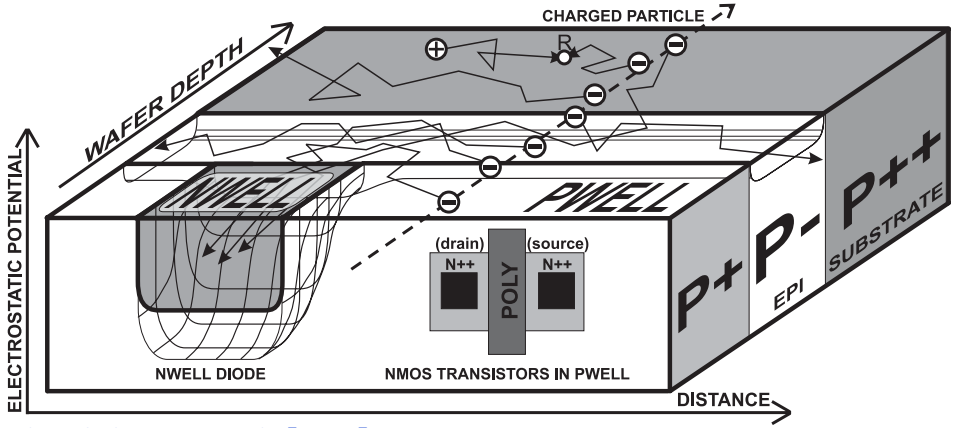

Conclusion and prospects

- **Prototype CMOS MAPS works as a minimum ionising particles detector!**
- **Charge collection : reasonably fast (~100ns), spread limited to few pixels, good agreement between device simulation and measurements.**
- **High energy particles beam test results :**
  S/N>30, 100% detection efficiency,
  spatial resolution <10μm (hope to get close to 1 μm)
- **Near future : rad-tolerant device with some new features (June 2000)**
- **Medium term future : large area (~10 cm^2) device (beginning of 2001)**
- **Long term future : intelligent, high precision, ultimately thin, large area and low cost device.**
- **Other potential application (in addition to MIP tracking): single photon imaging (HPD), β-particles imaging, high precision neutron imaging, scintillator and phosphor screen readout**

Literature

x C J S Damerell: Vertex Detectors: The State of the Art and Future Prospects, RAL-P-95-008(and references therein)

x Proceedings of the annual topics conferences on Vertex Detectors, e.g.

- Â Vertex'98 — NIM A435 (1999), 1-269
- Â Vertex'99 — NIM A447 (2000), 1-300

x Proceedings of the series of conferences "Pisa Meeting on Advanced Detectors" - the last one on Elba in May 2000